Canadian MeccaNotes

Issue # 4 December 1996

MODELING CHALLENGE: CANADIAN WINTER — SEE PAGE 28

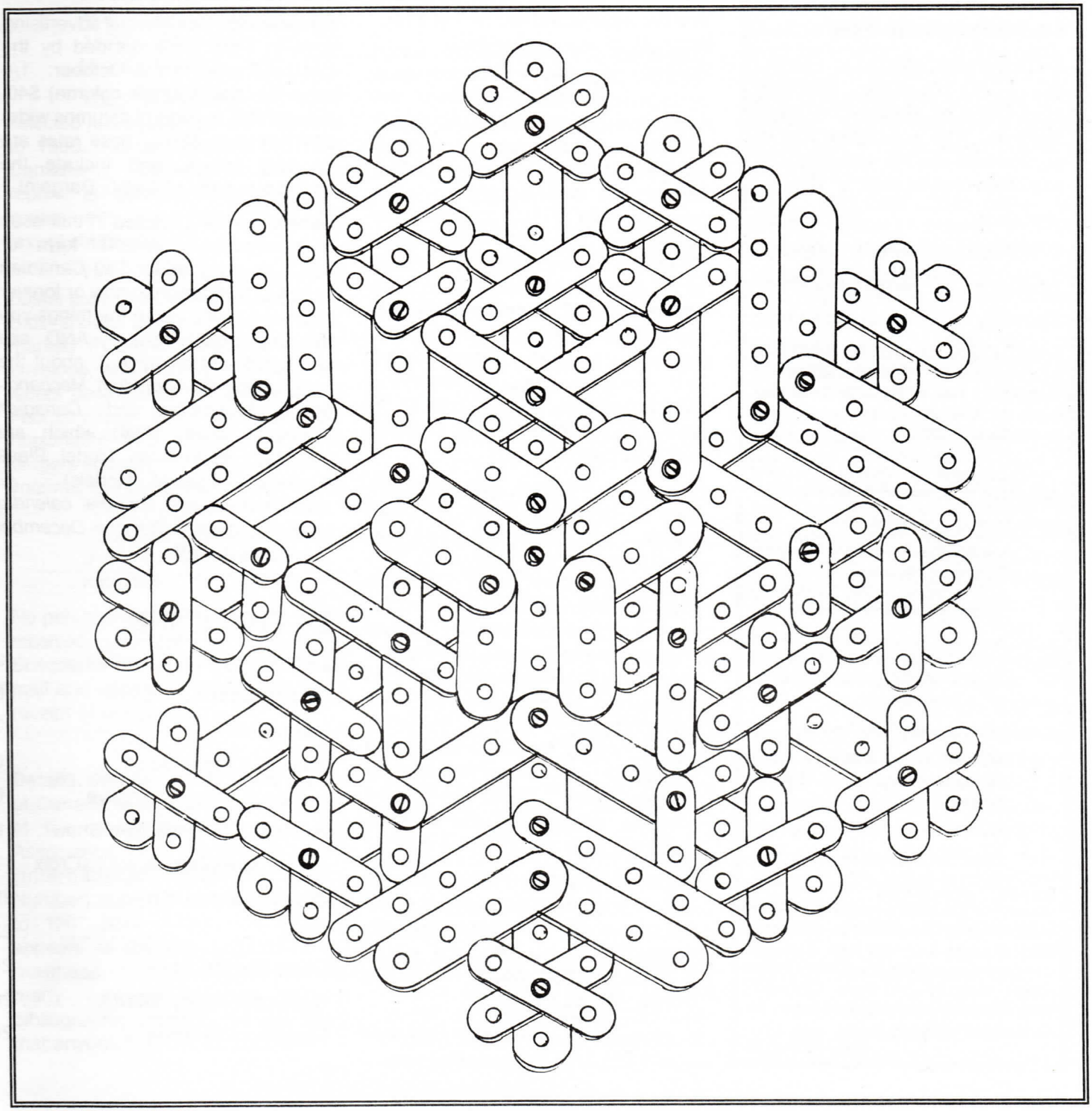

ONLY IN CANADA, EH? PART II — CONTRACTOR'S LOCOMOTIVE

Canadian MeccaNotes

Written and produced by Meccano® enthusiasts, for Meccano® enthusiasts.

No. 4 . . December 1996

Our Sixteenth Year

CANADIAN MECCANOTES is published by the Canadian Modeling Association for Meccano® & Allied Systems. The association and its publications are not affiliated with any other organization or firm.

President . . . . . Colin Hoare

Vice President John A. Wapshott

Treasurer . . . Marsha Brandston

Secretary . . . . . Colin Hinz

Editor, CMN Donald A. Redmond
9 St. Catherine St., Kingston, ON K7K 3R9
Subscription rate in North America (four issues per calendar year):
Canada $30
U.S.A. $28 U.S. funds
Cheques payable to Canadian Modeling Association for Meccano® & Allied Systems.

North America subscription address:

Ms. Marsha Brandston, Treasurer
Canadian Modeling Association
130 Neptune Drive, Suite 1109
Toronto ON M6A 1X5 Canada

North American subscribers to CANADIAN MECCANOTES are automatically members of the Canadian Modeling Association for Meccano® & Allied systems.

Subscriptions outside North America:

MW Models, 4 Greys Road
Henley-on-Thames, Oxon. RG9 1RY
England

Rates upon enquiry.

Credit Cards accepted.

ISBN 1207-2249

EDITORIAL

Happy Holidays: With this issue, *CMAMAS* celebrates its first anniversary, and *CMN* the completion of its first year's issues. We wish readers and Meccano® enthusiasts everywhere Season's Greetings, all the best of constructional worlds for 1997, and a busy enjoyable Canadian winter of modeling. In fact you're challenged to make Canadian Winter a modeling theme, as the front cover suggests; see the page elsewhere in this issue.

One Sheet of Paper: *CMN* increased from the 20 pages of the March issue to 28 in June to 32 in September. We hope everyone felt *CMN* was bigger and better—but it was at a price. One extra sheet of paper (4 pages) brought the mailing weight of each copy of *CMN* to 103 grams—three grams over the postal weight limit. The result was that every copy mailed to a Canadian address cost an extra 55¢ postage. Twenty copies went to the U.S. at a cheaper rate and each cost only 26¢ extra. Complimentary and exchange copies, to friends and groups overseas, cost an extra $1.85 each. That one extra sheet of paper cost $96 extra postage.

So too bad, but *CMN* will have to stay at 28 pages for future issues. The September issue had three major features: ten pages for a model plan, three of a Canadian feature originally in *Constructor Quarterly*, and three on the annual Skegex show in England. Coincidence maybe, but the President of *CMAMAS* was behind all three features. The Editor only hopes there will be such a pile of material for future issues—of 28 pages! And unless recipients of complimentary exchange copies overseas specially request air mail, those will have to go surface mail.

Oops, of Course: *CMN* is proofread at least twice, but typographical errors still trip us up. "Slotted" turned into "lossted" in Issue 3, and "tops" lost its *t*. Readers can delight in finding others. We do try.

Don Redmond

Meccanoworld: *CMN* continues to establish an exchange relationship with groups around the world. Recently agreeing to exchange are the Johannesburg Meccano Hobbyists; West London Meccano Society; Society of Advanced Meccano Constructors (based in Birmingham, England); Amateur für Metallmodellbau in der Schweiz (AMS, Switzerland); La Penya del Cargolet, Barcelona and Holy Trinity Meccano Club.

Advertising: Commercial advertising rates in *CMN* were decided by the *CMAMAS* executive in October: 1/6 page (i.e. half a single column) $40, ¼ page $50, ½ page (3 columns wide) $60, full page $80. These rates are for four issues, and include the advertisers copy of *CMN*. Bargain!

Renew Now!: Enclosed in this issue is a subscription renewal form for 1997: four issues for $30 Canadian or $28 U.S. Subscribe now or forever hold your peace about the things you will (we hope) miss. AND see announcement on page 3, about the back issues (of *Canadian Meccanoman's Newsletter* and *Canadian Meccano News*, 1994) which are available, as well as Model Plans (Canadian Special Models). *All subscriptions are for the calendar year and expire after the December issue (this* issue)!

IN THIS ISSUE:

POSTAL AUCTION

A generous benefactor has given *CMAMAS* two fine volumes, to be used for the benefit of the Association. They are:

- *The Meccano Magazine Anthology* (The Hornby Companion Series, Vol. 7A) (1991) 1072 Pages
- *Meccano Magazine Vol. XXIV Nos. 1–6, January–June 1939.* Facsimile reprint, Michael Bentley, 1981.

The *Anthology* includes selected text pages from the *MM* 1923 to 1963. Its list price is £35 ($77 Canadian). The *Meccano Magazine* reprint is complete with coloured covers, advertisements and the full text of six issues.

These volumes are offered by *postal auction* to *CMAMAS* members. Bids should be sent to the Editor, marked POSTAL AUCTION on the envelope, and bidding will close with letters postmarked not later than 28 February 1997. Minimum bid is a very reasonable $25 for each volume. Bidders should state which volume or volumes are bid upon. Address bids:

Postal Auction
Canadian Modeling Assn.
9 St. Catherine St.
Kingston, ON, K7K 3R9

No personal or telephone bids will be received. Postage will be extra. Successful bidders will be notified by mail and volume(s) will be sent upon receipt of remittance.

Details, Details: The National Library of Canada tells us that since the title of this newsletter as well as the Association name are new, the ISSN (International Standard Serial Number) assigned to it has changed to 1207–2249. The new number appears as the very last line of the masthead, page 2. It's one of the many services of our national bibliographic experts; but not likely that anyone has ever noticed it.

BACK ISSUES AND MODEL PLANS

Back issues of *Canadian Meccanoman's Newsletter* and *Canadian Meccano News* are available for 1989–94:

- Complete set of 1989–94 (24 issues) $90
- One year (four issues) $20; single issues $6

Model Plans (Canadian Special Models) are available:

- Complete series of 15 (*eight copies only* of the complete set available!) $75
- Set of 14 models (all except the Watt 1788 beam engine, after the eight complete sets are gone), $65
- Individual model plans at original price; specify desired items.

New Model Plans (Canadian Special Models):

- **#16. Stainless Steel Heat Treatment Plant** by Rob Mitchell. 16 Pages, 17 illustrations including six pages in colour! $10

Extra Special Models: Two plans too extensive to produce in the usual format will be available as photo-copies produced on *firm orders only*:

- Royal Yacht *HMS Britannia*, 26 pages legal size $10
- Steam Traction Engine, 106 pages legal size $22

Both are by Leighton Hill and are his detailed drawings, which are in effect part-by-part erection diagrams. These cannot be reduced to standard page size without affecting their legibility. See Hill's plans for the Trislander Light Transport Aircraft, in the September *CMN*, for an idea of the detail in these plans. Plastic comb binding.

All prices are in Canadian funds and include postage. Order all back issues and model plans from Colin Hoare, *CMAMAS*, 18 Tweedle St., Glen Williams, ON, L7G 3S5 Canada.

LETTERS

Greg Rahn writes:

I've just received the latest issue of *CMN*; great publication! I am new to the hobby (about a year) and have been told and have read that I may have got into this hobby too late, as there is no more used Meccano® left and the new stuff is expensive. Well, there is a little bit down here in Southern Alberta. Through advertising I have built up a sizable stock of parts as well as getting a few old and collectible pieces that include a 1920s flywheel, 1930s blue/blue 2-sheave pulley, and a 1920s nickel-plated 4-volt motor.

My best find came this summer when I obtained a nearly complete and near mint condition No. 10 set, from the original owner, who was given the set in late 1950 or early 1951, as she recalled. The set is regulation early 1950s, with the following anomalies. It contains a few "black period" parts but not all there could have been, as well as in odd combinations. They include: Three of the six 57-tooth gears are black and three are brass. Three of the six 8-hole bush wheels are black and three are brass. Wheel discs are all brass as well as all the small pulleys, except for the ½in. pulleys with boss in black. Flanged wheels are all brass as well as the nuts and bolts. Pawls and threaded pins are black, but the pawls with boss and the hinges are nickel.

The manuals are still being located by the previous owner but I don't hold out much hope they will be found. The original box is long gone but I suspect it wasn't the oak box, as she would still have had it, judging by the condition of 85% of the set (unused). My father is constructing a reproduction box in oak for the set from a picture in *The Meccano System*, p.198, and my dimensions derived from the parts layout.

I am fascinated with restoring old sets, and along with the No. 10 I have an original No. 8 from 1947; the

manuals were with the set this time! I am also building a large display to trace the history of old Meccano® parts. I trust this may be interesting to 'veterans' of the hobby as well as hope for some of us that are just starting 'too late'.

[Probably too late to warn Greg that it has been sorrowfully discovered that the acid in oak (which was used for tanning leather) can also damage Meccano® parts. Ask advice from a museum expert, or art conservation expert, on how to combat this potential problem.—Ed.]

Gaetan Parent writes:

I have been told that there would be no Meccano® show at Expo Québec this year, but a small Meccano® show [was] held in conjunction with an antique toys exposition in Bromont, Québec on 24–25 August.

My opinion of Dr. Keith Cameron's comments (*CMN* June):...

Lego being Lego, it may be a contender for small Meccano® sets. It's not the same thing when you compare what could be built with a large Meccano® outfit with a large Lego set. With such a quantity of Meccano® parts you may build precise mechanisms and structures such as a grandfather clock and the precision mechanisms of orreries.

I personally don't build such subjects, but I consider the amount of work adjustment as well as choosing the best parts among a lot of similar parts, to provide the smoothest movements you could have.

Some may think I am narrow-minded because I build only cranes and other machinery used today. Normand St-Aubin told me I was rough with my Meccano® models and parts; I have to say that it is true. In general Meccano® parts will withstand the torture that I impose on them. If they don't stand it, I am not shy to design new prototype parts and then have them machine shop made. Meccano® represents for me the best building medium because it has such a lot of different mechanical and structural parts—while Lego can only be used to build houses and other buildings; but did you ever see red, white, blue, etc., such a lot of different colours outside of a building. Anyway, I am a Meccano® addict. I do talk about Lego because Lego fans sometimes talk about Meccano®.

In *CMN* No. 2 page 8 (June) a mistake slipped in; it should be Larry McEwen not Terry McEwen. It may be added that the latest prototype parts are made by Bernard Champoux.

Regarding the NIST cranes (*CMN* June page 27), especially the one pictured at the bottom of the page: I think that if such a crane is to lift a small but heavy load very high near its top, all the hoists will pull very strongly against each other, well before the parts are lifted to the top height of the crane. This will result in incredible tension on all the parts of such a crane.

P.S. I just want to say that my father as good as he could be as a Meccanoman is terribly afraid of computers. My name is Philippe Parent; I am the 14-year-old son of Gaetan Parent. Even if I am not practising the art of Meccano®, I can imagine the amount of time that a Meccanoman passes in building his models. Meccanomen always try to get their art to a new level.

[Oops! Sorry Larry McEwen. Thanks to Gaetan and Philippe; their letter was too late for the September issue. —Ed.]

Keith Cameron writes:

Re Niel Dulson's problem of describing a complex model. I often run into this, and readily admit that I forget to describe what may be pertinent details of construction, only to discover too late that I have indeed forgotten them when I eventually take the model apart.

There is no one solution to this. I have found it necessary to dismantle some models during the writing-up process. I did this with the Heisler in *CQ* 32 because I wanted photographs of the integral parts of the model, and this helped remind me of some details I had forgotten. Some models lend themselves to this method.

I try to use *unit construction* wherever possible in any model. This helps to break the description down into manageable sections, and also it is a more orderly and organized way of undertaking the model-building process. It also makes dismantling easier. In fact, I have build several models with this technique, dismantled them into sections, photographed and described the sections, and then fixed the sections together again. This takes planning, but it is interesting, and the dismantling and re-assembling can be quite speedy if the joins between separate sections are designed correctly. This also helps in transporting a model in a dismantled state and re-assembling it quickly on the exhibition floor.

If the type of model doesn't lend itself to unit construction, one should either describe the model during the building process or make adequate notes of difficult spots to help with the future write-up. A word processor is helpful, providing the ease of altering words, phrases, whole paragraphs, very necessary if one is writing during construction, where constant revisions and changes are being made.

To answer Niel's question on motors: I have never found 120V motors truly satisfactory, and never use them now. The small induction motors are the only ones available, and many of them run hot, they are usually irreversible and they are large for the power output and awkward to mount. And, there is the shock hazard. I know the M5 is now expensive and the gearbox is somewhat delicate, but I haven't ruined one yet, they are adaptable to almost any situation, and the much maligned gear box is a great advantage if used property. A Mark Pile is a worthy alternative. A

Decaperm or Hexaperm is great where heavy output is needed. I have described power supplies fitted with speed and voltage control and made from Radio Shack parts. Can motors are sometimes cheaper than the Marx motors, and surplus one are available.

Lou Boselli writes:

Just a short note to compliment you on a fine job as *CMN* editor—issue No. 3 is great!

Also, I would like to respond to Niel Dulson's letter concerning parts packaging. Although the lists I sent out show the factory packets and packet prices, I will sell individual parts upon request at single part prices.

[Lou, once models wizard at West Point, is now consultant to Meccano–Erector Inc. of New York, and one of our sources for the latest parts and information. His address was in the September *CMN*, but not his phone number: 19 Payson Road, Cornwall–on–Hudson, NY, 12520; (914) 534–2863]

Niel Dulson writes:

Thanks for sending me the summer MECCANOTES. Lots of interesting stuff and since you included some of the things I've written to you about, including the fact that I was looking for rollers for a strip and plate bender, I received a letter from John Elias of Winkler, Man. offering to sell me a spare set of three home made rollers. I now have them and I'm ready to go.

The Strip Rolling Machine you featured in the newsletter is quite interesting. It's probably the strongest built unit I've seen, but there are a couple of anomalies. What is the purpose of the extra rollers situated on the opposite end of the roller shafts from the 2in. pulley and tire? The main rollers appear to be about 1¼in. wide so the extra rollers must be about ⅝in., big enough to be strip rollers on their own. Maybe the designer intended them to be the strip benders and the main rollers are only for Flat Girders. The picture on page 9 shows banks of many Collars used as spreaders on the two side arms whereas the diagram on page 1 shows banks of washers providing the same function. I particularly like the way the designer increased the torque capability of the 2in. Pulley by the use of the Socket Coupling and Collars.

The attached B.C.M.C. Newsletter contains a compete history of Meccano® parts purchases this summer, and as you'll see, I still have not received the rest of the parts that I ordered from Irwin Toy. They cashed my cheque when they sent me the first instalment of parts, back in July, but now 3½ months after I placed the order, and 2½ months after they cashed my cheque, they still owe my just over $100 worth of parts. As your executive pointed out, they are a Wholesale outfit for Meccano® Sets, but since there are no Retail outlets in Canada for Meccano® parts, they could easily fill that role. Besides, after I wrote to them to see if they sold Meccano® parts, they sent me a catalogue, and a complete Price List of every part showing Retail Prices, and the Sales Order Form which came with the parts I received, showed that they accepted Mastercard and Visa, and had sections of the form entering postage and handling, GST and PST. All of this indicates that they look and smell like a Retail Outlet at least for Meccano® parts. Surely there is someone in the Toronto area who could go there and find out exactly what is going on.

[Description in the September *CMN* of the strip roller should have noted the small 'outer' rollers, which are for bending closed loops. When very sharp curves are bent, the ends start to foul the rollers and can't be removed. Using the outer rollers, releasing one collar frees the retaining strips, and the curved item can be slipped off the end. Commercial spacers were used instead of Meccano® washers, in the photographed machine, because the washer supply was getting low.—Ed.]

Lloyd Spackman writes from New Zealand:

The part of your September issue that attracted me the most was the construction article of Leighton Hill's Britten–Norman Trislander aircraft. So much so that the day I received your MECCANOTES I began constructing it. I don't know whether Leighton would approve of my colour scheme—nickel fuselage with Märklin (pale) green strips on the top. Underpart of wings and stabilizer are yellow, but the top surfaces are blue Meccano® plastic plates with the rear edge of the wings in Märklin (pale) blue flexible 5½x1½in. plates, red wingtips and red propellers. The last are plastic, originally for model aircraft, and I shortened them to fit my model.

Thanks for printing this construction article. Leighton's textless drawings are excellent but need a lot of study to see what goes where. I have in my files two of his other aircraft drawing/plans.

As well as the aircraft, I have at present built Bert Halliday's miniature showman's traction engine for the second time, and a Märklin All Terrain Vehicle. I recently bought a Märklin M100 set to augment the Meccano®, and there are several Märklin parts on the aircraft. I find I am having fun building Meccano® models with the Märklin and using Meccano® parts to help out where necessary.

We have had another sad loss in our (Auckland) Meccano Club. As well as losing Bill Watt, our Club Secretary Brian Buchanan died of cancer a couple of weeks ago. He was only 51. They both have left big gaps in our membership. I look forward to the next and future issues of MECCANOTES.

[Our regrets to the Auckland Club in their losses. Good news for Lloyd; see elsewhere in this issue about the availability of two *splendid* model plans from Leighton Hill. Remember, Märklin started out as Meccano, prior to 1914.—Ed.]

OTTAWA SEPTEMBER SHOW

The toy and train show at the Nepean Sportsplex (in an Ottawa suburb), in the past a spring event, went semiannual in September, and a dozen enthusiasts and spouses rallied to the invitation from Jerry Dubois to join in the fun and the Chinese dinner. Jerry had display models from Binns Road whirling (one of them Mike Shaw's as Mike was elsewhere) and his Keilberg carousel.

Norm LaCroix, accompanied by Marg, had his beautiful brass (all brass) traction engine glinting, his oilwell pump catching attention, and all kinds of parts for sale, including some dark red/green and an Army multikit which he had garnered this summer. Normand St-Aubin, accompanied by Madeleine, had in addition to his eye-filling truck crane (seven axles, three steering, four powered) an amazing but compact (and long) model of a 16-axle (that's axles not wheels) heavy hauler for massive loads like boilers or transformers—made almost entirely from the most common Meccano® parts found in small outfits.

Bernard Champoux, accompanied by Thérèse, had reproduction Lionel standard (2.5 in.) gauge trains in Meccano®, running on Lionel track; amazingly nostalgic!

John Wapshott's lighted Ferris Wheels caught the eye as soon as one entered the hall (Trix, pre-1924 Erector®, and British Model Builder, also called Meccano-X). and beside them an array of vehicles in half-a-dozen construction systems, from a Meccano® blue/gold Jeep through Erector® 5-in-1, to an Engineer truck (system made in Toronto and described in *CMN* in June), and one from the Meccano Trucker Fleet set, seldom seen and brightly coloured: a tank truck, using bottoms of plastic bottles as ends for the white plastic tank. Larry Yates (also with his Mrs.) brought a splendid rendition in red/green of the old favourite double flyboats (contra-rotating double Ferris wheel). A particular point of his version was the platforms, made of sector plates rather than the usual flat plates.

Don Redmond brought a tableful of small models, including Meccano® flowers never nurtured in any garden, and an 1895 chemical fire engine designed by the Kingston fire chief of the time. Others attending included Denis Fondrouge, Tom Wright and Charles Shrubsole.

(Pictures on Page 18)

TOY COLLECTORS IN OCTOBER

A feeding frenzy, was how someone described the Canadian Toy Collectors Society show Oct. 20, at the Skyway convention centre south of the Toronto airport. *CMAMAS* had been invited, and was given eight tables which we draped with dark (Meccano®?) green cloth. At one end of the long L was John Wapshott's 8-foot-long bridge in Meccano Junior, undoubtedly the biggest plastic model of the year, with a procession of motor vehicles along it; Jeeps of all colours, tank trucks, even a semi-trailer of real logs (well, tree branches). At the other end of the L were Atilla Szakonyi's double beam engine and Starburst, with Erika Szakonyi's Meccano Junior models, a fine appearance. Dennis Caswell's No. 10 ship in yellow/black/zinc, was impressive at a couple of metres long. On the other side of the area was Larry Yate's portal container crane, with dummy containers to unload—too bad it wasn't unloading Dennis' ship; it was illustrated in the June *CMN*.

John Worfolk had a neat steam engine plant, with a gearshift by which it could change speeds; a Ferris wheel and neat motorbike. Don Pearson brought a Meccano Ltd. display model, the fairground aeroplanes. Normand St-Aubin's truck crane (also shown in the June *CMN*) constantly attracted a crowd. Manfred Leimgardt showed off two items he has acquired at the CTCS members session: a combination Meccano®-plus-Erector® steam traction engine, and a motor-tricycle built around a blue clockwork motor, with the early and scarce red/gold road wheels. Colin Hinz was having some problems with his noise-(music)-making machines. Don Redmond unpacked a suitcase full of small models, including a semi-trailer truck using the large Gilbert Erector-Meccano baseplate, and his wacky garden plants. Eric Eisen filled Jack Smith's old job with a kiddy korner. Other attendees included Colin Hoare, the Brandstons, and Ted Van Klink.

There was Meccano® to be had at the show from a number of exhibitors, much of it as odd-lots, including a big lot of Aeroplane Constructor parts, and several batches of *Meccano Magazines* and company literature.

MECCANONET

The *International Society of Meccanomen* has in its Members Newsletter for September a list of some eighty enthusiasts on the Internet, from seventeen countries around the world. The list is compiled by Michael Adler: <anthias@actcom.co.il>. It includes nine Canadians. The Meccano World Wide Web site is <http://www.dircon.co.uk/meccano/>

A.C. Gilbert: Erector® (the US stuff, pre-Meccano-Erector) has its fans and they have an A.C. Gilbert Heritage Society, which is on the Internet. E-mail Joe Grobmyer to make a connection, at <grobmyer@ro.com>. And there's a Construction Toy Homepage on the Web, at <http://www.chem.sunysb.edu/msl/lego/homepage.html>. E-mail Joe Lauher, Department of Chemistry, State University of New York, Stoney Brook NY 11794, on this one: <lauher@sbchem.sunysb.edu>.

WANTS AND OFFERS

Want Structomode parts, box, sets, manuals; American Model Builder box in any condition; Structo braced girders, gears, Castle Builder parts, box. Write to the Editor.

Want Structo large gear no.75, propeller blades no.76. Richard Symonds 15170 Dove Place, Surry BC V3R 4T5

Want Spoked wheels 19a; toothed plate for digger bucket 169; Meccano® set boxes (whole/partial), parts boxes (card or metal); Meccano® advertising or literature. Greg Rahn, 27 Cayuga Place, Lethbridge AB, T1K 5J1

Offer: Photocopied Meccano® manuals: 00–3, English edition 1930, 128 pages; 4–7, Canadian edition 1929, 140 pages. Meccano Prize Models 1914–15, as issued as supplement to *Canadian Meccanoman's Newsletter* 1983, 24 pages. *Meccano Parts and How to Use Them,* 1935, 30 pages. Single-sided photocopies (Prize Models double-sided) punched for looseleaf binder. Free for postage; write to the Editor.

Offer: TemSi, sets 2 and 3, complete, mint; new price no. 2 $50, no.3 $80; offers to David McDonald, 3127 Bartholomew Cres. Mississauga ON L5N 3K9; Tel. 905–824–1085

Want: Late 1970's or early 1980s Meccano® manual for sets 8–9. Dany Friedman, fax/tel. (416) 512–7488.

COMING EVENTS

March 1–2, 1997: Train and Toy Show, Nepean Sportsplex (Ottawa). Meccano participants, get in touch with S. Jerry Dubois, 69 Mark Ave., Apt. 2, Vanier, ON K1L 6A6; Tel: (613) 746–4533.

April 19–20, 1997: Kingston Rail-o-Rama, Portsmouth Olympic Harbour, Kingston, ON. Meccano particpants, get in touch with Don Redmond, 9 St. Catherine St., Kington ON K7K 3R9; Tel: (613) 546–7728

MECCANOTES

Toronto Addresses: Following the items on Toronto addresses of the Meccano agency, in the June and September *CMN*, a Hornby Trains leaflet dated 1930 has turned up, listing the "Canadian Branch" of the firm at 34 St. Patrick Street, (Thanks to Peter Zimmerman for his June letter). At the Toy Collectors Show in October, a number of pieces of Meccano® advertising were for sale, some with the 675 King St. W. address as late as 1960. Anyone for a walking tour of Meccano® in Toronto? Should we add Hanna Ave.?

Henley, Kew: the annual show for Meccano® enthusiasts at Henley-on-Thames, England (not open to the public) was on 31 August. Friends came from much of Europe and as far away as New Zealand. Another big show was at Kew Bridge Steam Museum, in the southwest of London, a former pumping station with enormous engines (100 in. diameter, 14 ft stroke). Meccano® models matched the steam engines. Derrick (suitable name) Clapperton matched our own Al Brandston, with a mobile LG1200 crane 9 m high (that's 30 feet!). That's only a snippet from *International Meccanoman* for September. MW Models has for sale *Modelbuilding Technology* (32pp., £6.40), a compilation of Mechanical ideas re-edited from *International Meccanomen* 1988–96.

Wish Book: Everyone in the US and Canada had seen, by mid-September, the Sears Christmas catalogue, which contains a page of Meccano® (No.5 set, "save $30" at $130) and several pages of Imitators both European and Oriental. Competition in the toy business is really tough.

Nonmetrication: The ISM also reports that Meccano SA does not seem to intend to change its basic half-inch and Whitworth specifications, though it may for instance sell sprocket chain by the meter instead of 40 inches. As in Canada, you might have to buy used Meccano® by the kilogram (which they do in Europe anyway).

Strip Bender: The design in the September *CMN* was by Mike Edkins, of the Midlands Meccano Guild, by way of Jerry Dubois and Ed Barclay. Jerry informed the Editor; it seems an accompanying note about the design was mislaid somewhere between editors. A revised version of the design is in the November *Meccano Newsmag* from the North Midland Meccano Guild.

To add to the September article, for the grubscrews in the rollers and pinions, hex-socket-head short (7/64in., 3mm) grubscrews, available from MW Models, are advisable. Slotted-head grubscrews can be easily mashed by the locking force. Flats are necessary on the two lower rods. No grubscrews are needed in the rollers on the upper rod. Strips can be bent to smaller radii if the trunnions holding the slide rails, nearest the handwheel, are exchanged for 3-hole strips or flat girders, giving an extra bit of slide. Be sure the handwheel and the driven rollers spin freely. The bender attracted attention from both *CMAMAS* people and the public, at the Oct. 20 show.

Happy Birthday: To Jack T.A. Smith in Petawawa, Ont., who turned 80 in October. Hobby Show isn't the same without Jack's models for the children, marine models, and sharp words for the grownup Meccano® boys.

Irwin Change: Mr. Michael Ferriday has left Irwin Toys, reportedly to elsewhere in the toy industry. The new person as Irwin has not yet been reported.

Fond Memories: My younger brother Jim received one Christmas during the 1930s a building set of rubber bricks called Mini-Bricks. Now these were the "real thing." (The plastic Lego didn't come along until the Second World War cut off the rubber supply.) The rubber bricks snapped

together and had small indentations around the edges to enable celluloid windows and doors to be installed. Complete with rubber-moulded V-shaped roofs. Jim readily built his forts, castles, etc. While I was busy working on my Airplane Meccano, dreaming of emulating Billy Bishop, he soon began making airplanes which we both delighted in crashing together,to see which plane could withstand the greatest hit!

The regular Meccano® and Airplane Meccano were the very best toys. Much better that the U.S. imported Erector® sets. I can still recall the Meccano Magic Motor (clockwork) and of course the Hornby trains.

When I returned from service after the war with the Royal Canadian Dragoons, I asked my Dad, "What happened to my old boneshaker bike and Meccano?" He said "I figured you wouldn't need them anymore so I gave them to deserving kids."

Oh, how I wish my five sons could have enjoyed my old toys.

(From *The Globe & Mail*, 28 August by Donald P. Evans)

Reason Why: From that long-running British TV comedy, "Last of the Summer Wine", a snippet of dialogue: "Tha was never much of a lover Clegg." Clegg, diffidently: "Well, I had this big Meccano set..."

Evolution is Slow: The smaller "Evolution" sets, in the new Meccano® range, were on Canadian store shelves by September. Meccano® was in good supply although some North American-produced plastic systems were also plentiful. The Oriental Imitators seem to have been deeply discounted and stock not replenished—which is a hopeful sign.

Confederation Bridge to P.E.I.: Who'll be the first to model the whole (or even one span) of the "fixed link" to Prince Edward Island, named the Confederation Bridge at the end of September? Even better, who'll model the **heavy-lift vessel** (HLV) *Svanen* (swan), the enormous floating crane which set the cantilever spans in place? The Toronto *Globe and Mail* on 8 June in its Science and Technology section had two full pages of illustrated story on the undertaking. Regrettably *CMN* is unable to bring its readers illustrations (let alone instructions for modeling!) as the National Newspaper wanted a hefty royalty for using them. The HLV is a double-pontoon floating crane 72m across (236ft) by 103m long (335ft) and can lift a 192m bridge span weighing 8200 tonnes, using 7km (23,100ft) of steel cable.

The Runnymede Meccano Guild *Newsletter* No.31 (September 1996) has a description of a shipbuilding crane, named Samson and built by Krupp, just a little smaller: 140m span (460ft) and 80m high (262ft) with a working load of 840 tonnes, with three 300-tonne lifting hoists. Jayanta Mitra sketches building instructions for a 1:80 model 5ft 2 in. high!

Sincere Sympathy: To Al Brandston, who suffered a spinal stroke in late October, interfering with his mobility and sitting. Hobby show visitors, and the Meccano® Gang, missed him and his gigantic crane. Marsha came, in her capacity as *CMAMAS* Treasurer, and reported that Al is doing well and fighting. The crane had been packed and ready to bring to the show—and is rather in the way! Our best wishes for speedy progress go to Al.

Exchanges: From the West London, group, Newsletter No.50: Detailed description (no pictures) of Julian Head's rebuild of 1937 Manual model 10.19, the 1906 Madras Titan blocksetting crane, in blue and gold at ½in. scale—done within a No.10 set plus small parts. The Newsletter is accompanied by *Everything WLMS* —Robin Johnson, move over! Colour picture and instructions for a Harley-Davidson Electra-Glide motorbike, by Philip Webb; colour pictures of Julian Head's model of a Tower Bridge steam engine (in the prototype colours) and Peter Goddard's 1885 Stothert & Pitt hydraulic radial blocksetting crane. A "adult history" autobiography by Bert Love; a history of Tower Bridge by Julian Head; an eight-speed "Jubilee" commercial-vehicle gearbox; sundial basics, by the late Noel C. Ta'Bois; automatic transmissions, by Nick Rudoe.

Falcon Flies (Sort of): "Star Wars" fans will grab at the constructional model of the "Millenium Falcon" spaceship marketed by one of the Imitation Imports in a big (20x14x2½in.) box with a "mega sized" (shown actual size) picture. The set can be found discounted from $120 to $60; but is it worth anything to construction modelers? Of the "1063 parts" 27 are plastic and two metal diecast bits of spaceship for modelers. The constructional parts include strips (3 to 11 holes), brackets, double angle strips (1in. and 1½in. long) and 750 nuts and bolts, with a new-part price of $263. Probably these parts could be found in quantity secondhand at half that or less—say $120 or less. Anyone in need of Allen nuts and bolts (yes, BSW thread!) and short strips will get a good buy at $60. The set won't build much of anything except the Falcon, but it wasn't intended to. One plus item: four sturdy flat plates identical in size to the familiar 3x5-hole flexible plate—worth collecting into the regular modelbuilding stock. So near and yet so far: two 24-hole plastic rings, the holes ½in. apart but only $3\frac{7}{8}$in. across the diameter, the ring 4½in. across: useful if they were metal.

Flattery: Imitation is the sincerest, goes the saying; and the Johannesburg Meccano Hobbyists *Newsletter* No.28 (July) reports that among the models at their May meeting were the Beach Rescue Vehicle from *CMN* (March), and the 1909 Seagrave Chemical Fire Engine (*CMN* Modelplan 15)—the latter improved by fitting a Power Drive Unit motor, and the running board ingeniously made of 6½in. rack strips. And they have asked to reprint Murray Russell's Low Profile Roller Bearing (March), Manfred Hammer's Whirligig, and Ed Barclay's

"Cinderella" note about Part 64. Please do! The September *JMH Newsletter* has IsoMec drawings of a compact 4-speed-and-reverse-gearbox, and a multipoint (multiple-output) gearbox using about a dozen 38-tooth gears. E-mail address for Dave Feinstein, JMH secretary: <define@global.co.za>, and Roger Hill, editor: <rhill@global.co.za>

Ottawa Roadblock: The structure below is neither a Bailey bridge nor an executioner's scaffold, but an infuriating obstruction to Ottawa traffic: something called an AFCO Transporter. It's blocking half of a bridge across the Rideau River, between Ottawa and Vanier, and is expected to be there for a couple of years while the concrete bridge is rebuilt.

Looking like a giant's Meccano® model, the road side is counterweighted with concrete blocks, while the other side is cantilevered over the water and from it hangs the working platform. As a section of the work is completed, the structure can be moved along for further work. Jerry Dubois is an everyday user, living just a few hundred metres from the scene, and took pictures at the Editor's urging, while (he says) the people in white hard hats were politely telling him to get off.

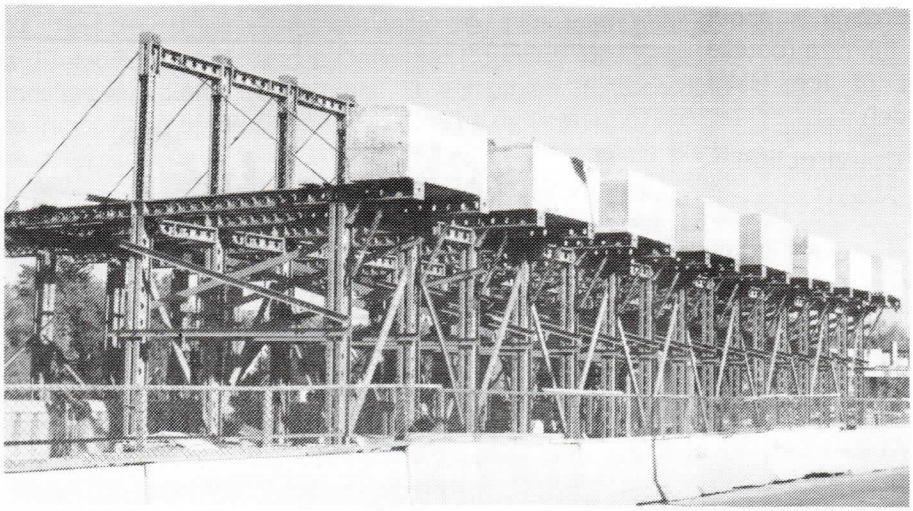

The Chief (French) Meccanoman

A very French businessman believes there is a kind of a child, with patience, who will like Meccano®. In *The Independent* newspaper in London last July 28, David Bowen described Dominique Duvauchelle, who bought the Meccano business in 1989. Bowen quotes Duvauchelle as saying that Meccano® is more challenging than plastic bits and more satisfying than video games, and he is convinced that children need a tangible balance to virtual play. "A successful construction toy must be difficult enough to challenge a child, but not so hard that he cannot complete it. This balance is difficult to judge, especially as the standards vary from county to country. In Germany, for example, children can be challenged hard whereas in the US they give up with hardly a struggle."

Duvauchelle, already one of the top businessmen in France at 38, bought Meccano from a French accountant, Marc Rebibo, who had bought it from American conglomerate General Mills in 1985. When he bought Meccano its annual turnover was the equivalent of $12 million Canadian and employed sixty people. He hints that today sales are up about 15-fold, and staff number 350.

Opportunity Missed

There are enough opportunities to promote the hobby, and one came my way earlier this year that I discovered too late to act on it. There is a company called Hampstead House Books located on Richmond Hill, just north of Toronto. The company buys up the remainder stocks of unsold books from such stores as W.H. Smith, and then published their latest acquisitions in a catalogue. The catalogues are published about eight times a year. I have been on the mailing list with the company for about ten years now, and many members of staff at the company where I work, as well as I, have purchased a considerable number of books they have had for sale.

I was away on holiday when the April issue of the catalogue arrived, and so I did not get around to reading it for about two weeks, what with getting everything else off my desk. That proved to be a mistake; when I finally picked it up to review it I discovered that they were selling Geoff Wright's book "The Meccano Supermodels" for a mere $34.99 or half the original price.

I telephoned the company right away, to see how many copies were available originally and how many had been sold. I learned that they had had forty copies to start with,only two of which were still on the shelf. Despite the misgivings of the owner who purchased the bulk lot, the books had gone like the proverbial 'hot cakes'.

Unfortunately the company is too small to be able to trace the purchasers from their records, so the chance to send out a "CANADIAN MECCANOTES" flyer to each purchaser of the book, which is what I was hoping to do, was lost.

Colin Hoare

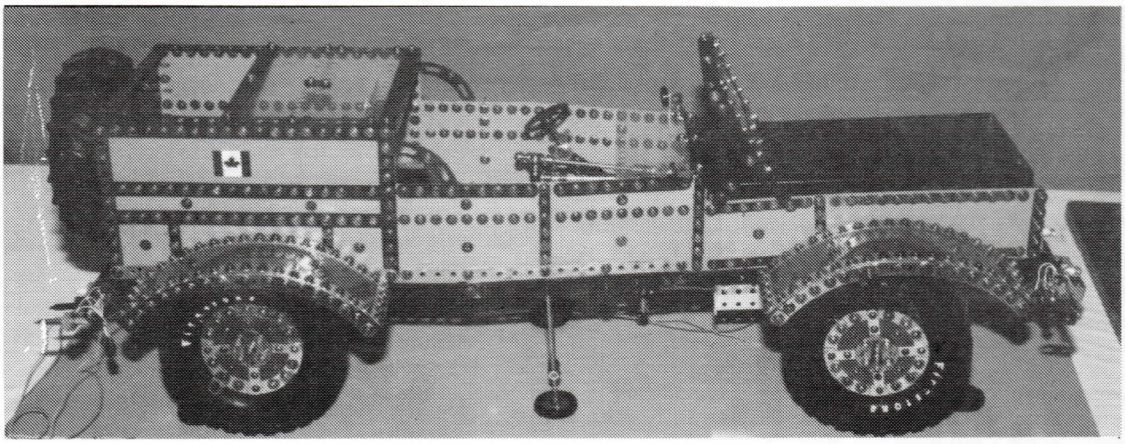

JEEP ON A LARGE SCALE

by S.J. Dubois

Most large-scale models using "ashtray" tires (about six inches outside diameter and over three inches inside 16cm/9cm) seem also to require an abundant supply of gears and other special parts. Unless you have those I suggest a Jeep. This model is based on the "American Army Jeep" from the GMM Series of Modern Supermodels (by kind permission of G.M Wright), by Sr. D. Eduardo R. Oropeze of Querétaro, Mexico— except that it is doubled in size, with a change of parts and some numbers. Section 1, The Prototype, of the GMM plan contained information perhaps more familiar to North America modelers than to the original U.K. audience and is summarized here.

1. The Prototype

"Jeep", the popular name for the U.S. Army's quarter-ton truck, was the registered trademark of Willys Motors Inc. It was developed as a fast military reconaissance car to replace the motorcycle. Only 11ft (3,4m) long and 4ft (1,22m) high, it had power, stamina and manoeuvrability. It could carry troops, ammunition or cargo, tow aircraft or light artillery, serve as ambulance, fire fighting vehicle, machine gun carrier or radio car; it could cross bridges too weak for other vehicles, and could be carried by air. Its mobility lay in light weight (2200-2250 lb., 1000-1137kg), four-wheel drive and four-cylinder gasoline engine. Top speed was 60mph (90km/hr). Development of the Jeep began in the 1930s, and a Willys-Overland Co. model was adopted in August 1941. During the Second World War 634,569 Jeeps were produced by Willys Overland and Ford.

2. The Model

Only small models of Jeeps were published by Meccano Ltd: MM 9.48, 3.56, 11.56 and 2.62; Model 4.13 in 1954-61 manuals was an elementary Jeep. The model described in the GMM series, and here, does not reproduce all features of the prototype. Drive is to the rear wheels only, not to all four wheels. The scale is about 1/5 full size (double that of the GMM model).

3. Construction

3.1 Chassis (Fig. 1)

The frame consists of two 12½in. Angle girders (1,2) joined to two similar girders (3,4) by two 7½in. Strips (5,6) and two 6½in. Strips (7,8). Four obtuse Angle brackets join strips 7 and 8 to girders 1, 2, 3 and 4. A 12½in. strip (9) and two 1x½in. Angle brackets (9A) and a 12½in. Strip (10) are fixed to the ends of Angle girders by Angle brackets.

Four stacks of slightly curved strips (5½, 4½,3½ in.), shown at 11, 12, 13, 14 form the springs. They are attached to the Angle girders by 2in. Strips (15) and 1x½in. Angle brackets (16). The 2in. Strips are not used at the forward ends of the rear springs (17, 18), 1½in. Angle brackets only being used.

Two 7½in. Strips (19) are bolted across the front springs, and two (20) to the rear springs. A ½x½in. Double bracket (21) is bolted to the centre hole of the rear strips (20). A 7½in. Strip (22) and two ½x½in. Angle brackets (22A) are fixed across the frame by bolt 23 and a similar bolt on the other side, while a 5½x½in. Double angle strip (24) is fixed across the frame by bolt 25 and a similar bolt on the opposite side.

3.2 Gearbox & Transmission (Fig. 2)

An electric motor (E15R, E20R or Stokys M1) is bolted between two 5½in. Angle Girders across girders 1

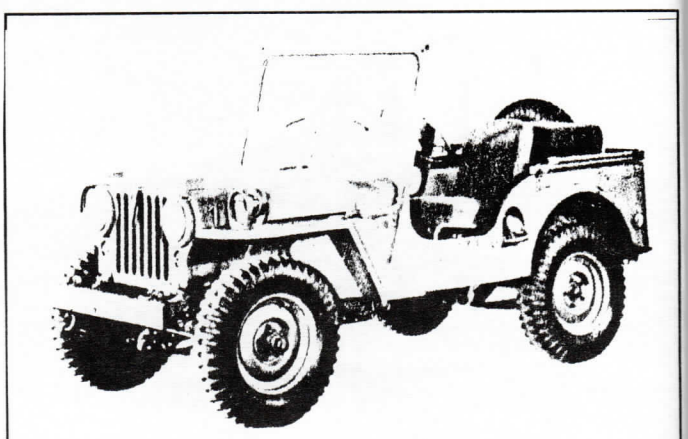

1950-51 MC-M38 military

1950 Jeep

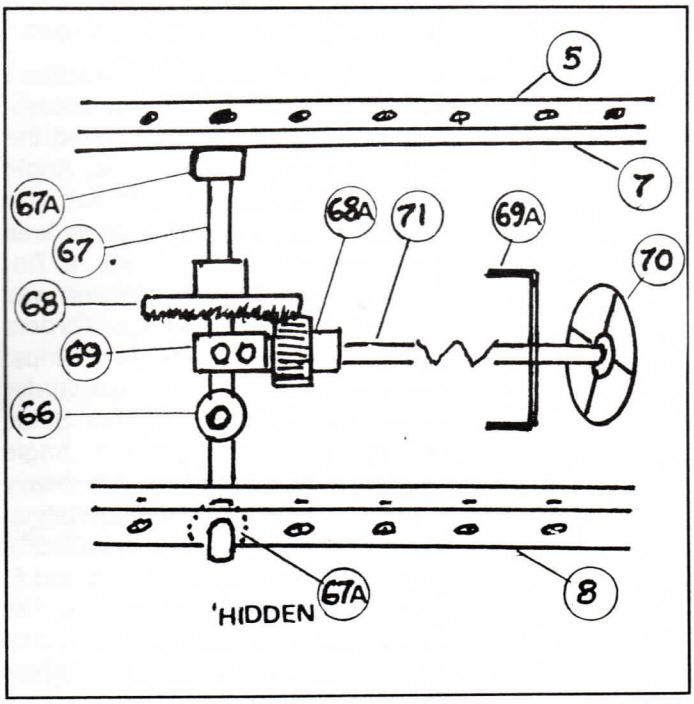

Fig. 1A. Steering (diagrammatic)

and 2. Two of the fixing nuts and bolts are indicated at 26, fourteen holes from the front, and 27, four holes from the rear in Fig.2 which shows the underside of the complete chassis. A ½in. pinion 28 on the motor shaft meshes with a 57–tooth gear 29 on a 2½in. rod (not shown) journalled in the motor sideplates. This rod carries a worm (not shown) which engages a ½in. pinion 30 on a rod 31 journalled in two Flat Trunnions extended by a 1½in. Flat Girder to the two Strips 22 and 24, by bolts 32 and 33. Rod 31 also carries ½in. pinion 34, a collar 35, and a ¾in. pinion 36. The rod is slidable, its movement limited by collar 37 and pinion 30.

An 8in. rod 38 is journalled in the lower holes of the Flat Trunnions (with 1in. Flat Girder) bolted to Strips 22 and 24. Rod 38 carries a retaining collar 39, a 58–tooth gear 40, a 50–tooth gear 41, and a Universal Coupling 42. Gear 40 meshes with pinion 34, and gear 41 with pinion 36, according to the position of the sliding rod 31. The movement of rod 31 is controlled by a lever shown in Fig.3. A fishplate 43 is bolted to collar 44, and is placed between collar 35 and pinion 34, washers being used for spacing. The lever pivots on a 3in. rod 45, fixed to the lower hole of Coupling 46. Rod 45 is journalled in Strip 7 and a ½x½in. Angle Bracket 47 bolted to strip 5, and also in a 1½x½in. Angle Bracket bolted to Double Angle Strip 24 (not shown).

A 6in. rod 48 is fixed in the universal coupling 42 and passed through the ½x½in. Double Bracket 21 (Fig.1). Rod 48 carries a 1½in. Contrate 49, which meshes with ½in. pinion 50 on the rear axle, which is an 11½in. Rod 51. (one rear wheel is omitted for clarity in Fig.2). The rear axle is journalled in the ½x½in. Angle Brackets 53 and 54 (Fig.1), retained by collars and washers. The wheels are described

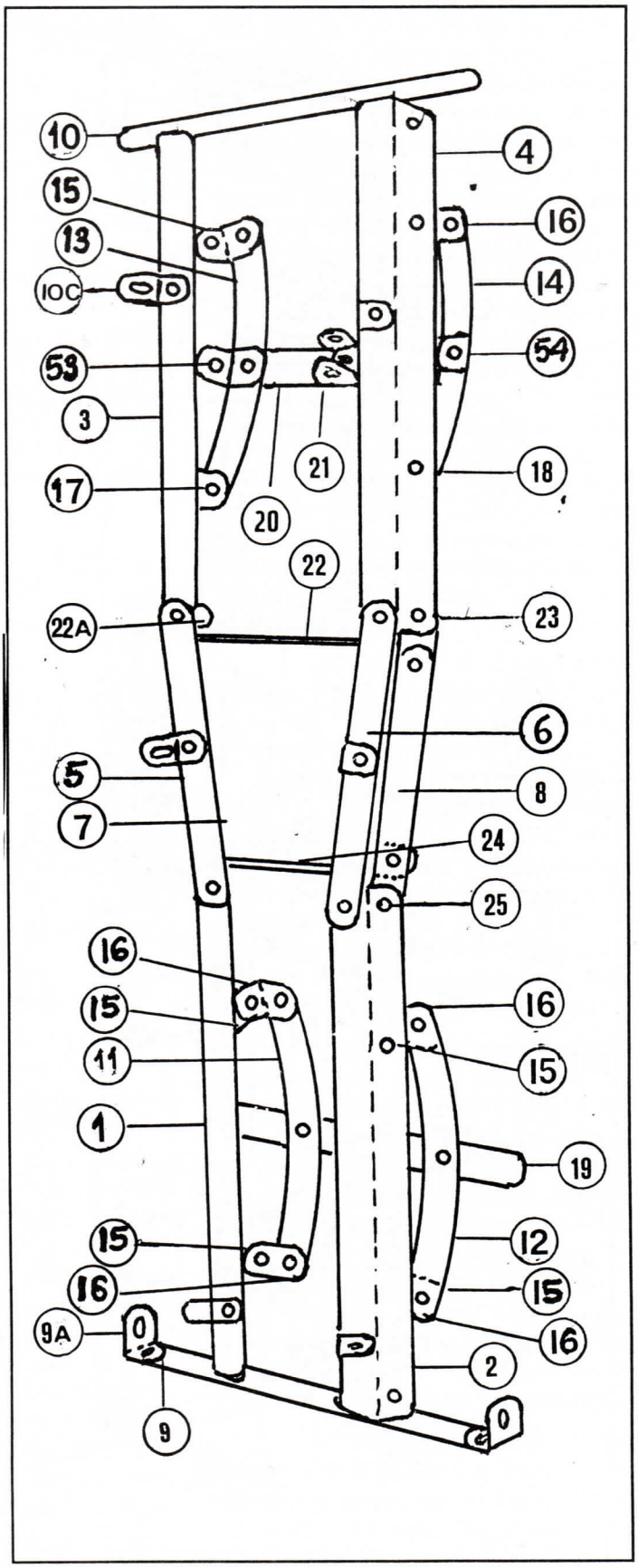

Fig. 1. Chassis Frame

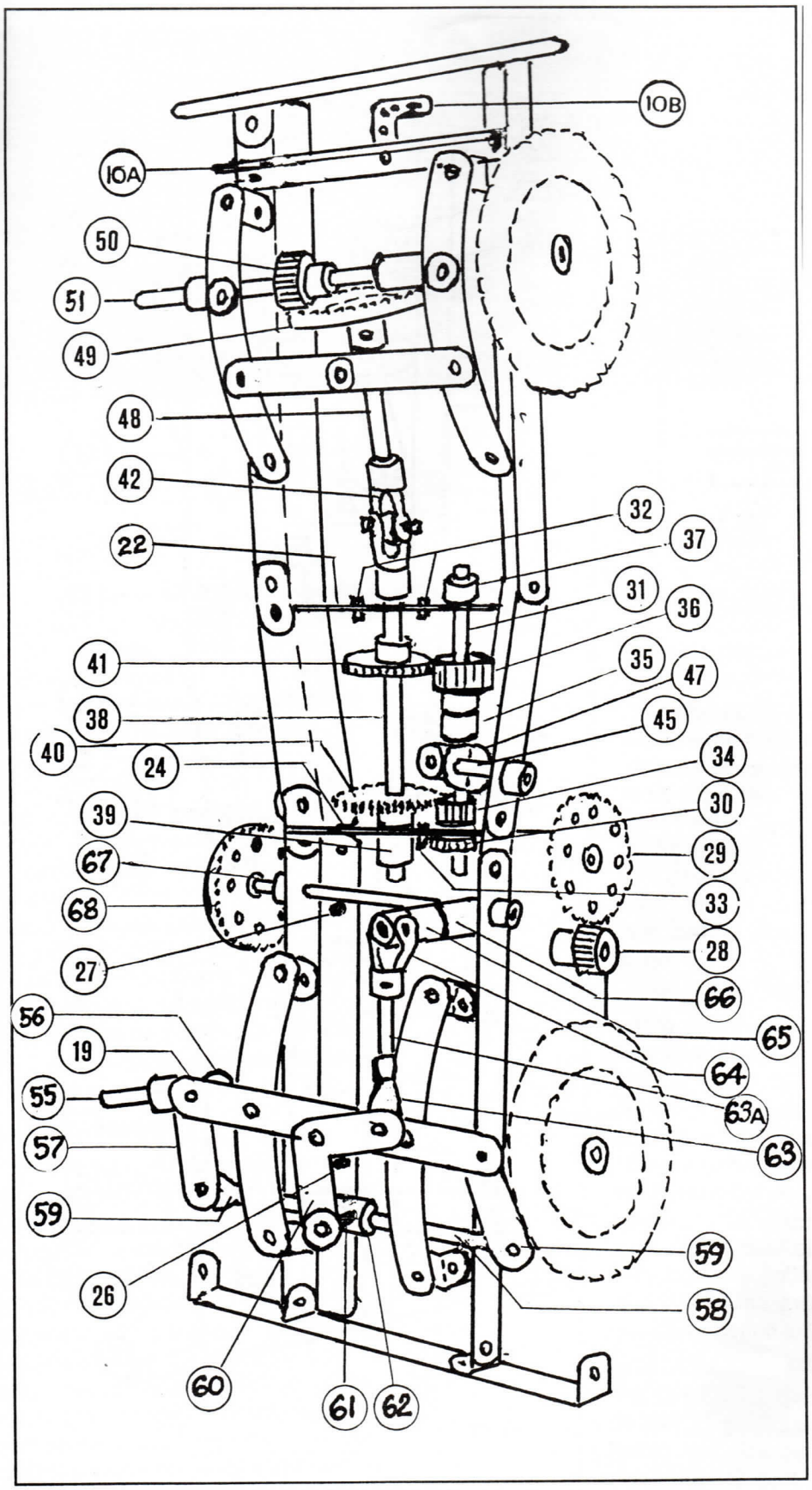

Fig. 2. Underside of Chassis

in sec. 3.7 below. There is no differential, nor is a clutch provided.

At this point in construction I built a plinth to strengthen the chassis and make it more rigid. I boxed the centre section with four 5½in. Angle Girders, cross-bracing with two 7in. Narrow Strips. The front bottom was 6in. Angle Girders, the rear a 7in. Angle Girder. The front section was made of three 5½in. Angle Girders braced by two 4½in. Narrow Strips. The rear was two 5½in. Angle Girder braced by two 4½in. Narrow Strips with the addition of a 7½in. Angle Girder on the bottom. This heavy solid plinth I left on for transportation. For display purposes I installed a 5½in. rod fixed on 1, 2, 3, 4, 5 and 6, held by a crank fitted with a 1in. wheel and rubber tire, and crossbraced by another 5½in. Angle Girder held by a Coupling on the Rod.

3.3 Front Axle and Steering (Fig.1A)

Each stub axle 55 is a 3in. Rod journalled in a ½x½in. Double Bracket 56 which is locknutted to Strip 19 (Fig.2), a 1½in. Strip 57 also being retained inside the Double Bracket 56. The track rod is a 6in. Rod 58, which is connected to the Strip 57 by Rod-and-Strip Connectors 59.

A Bell Crank with Boss 60 is pivotally attached in the centre hole of strip 19 by a ¾in. Bolt and locknuts; a ½in, Bolt 61 is also held in Short Coupling 62 fixed to the track rod. A Rod-and-Strip connector 63 holds a 9in. Rod 63A carrying a Universal Coupling 64. The latter holds a 2in. Rod 65 inserted in a Coupling 66. Coupling 66 (Fig.1A) is fixed on the 6in. Rod 67, which is retained by collars 67A inside Strips 7 and 8. The rod 67 carries a 1½in. Contrate 68, a Short Coupling 69, and Coupling 66. The steering wheel 70 is fixed on a 4 in. Rod 71 journalled in Short Coupling 69 and a 1½x½in. Double Angle Strip 69A which is bolted to Strip 84 (Fig.5). A 5½in. Narrow Strip is fixed to the free end of Double Angle Strip 69A and to a ½in. Corner Angle Bracket (right hand)

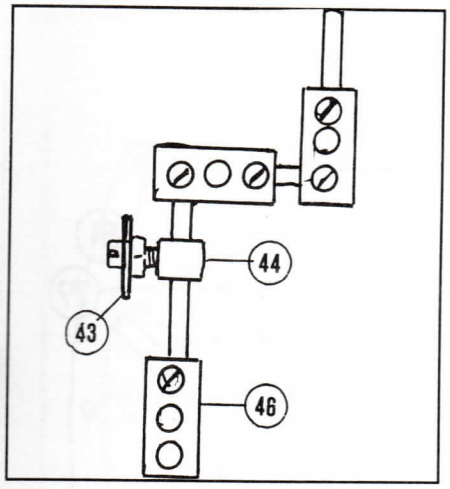

Fig. 3. Gear Lever

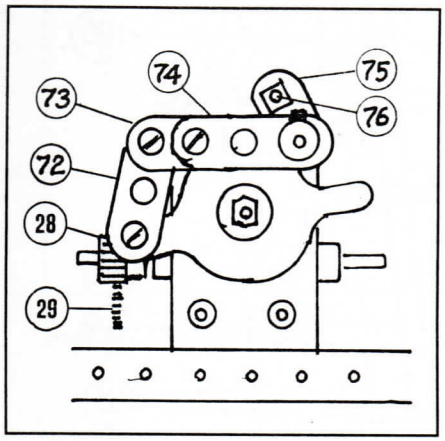

Fig. 4. Motor Control (E15R). (front view).

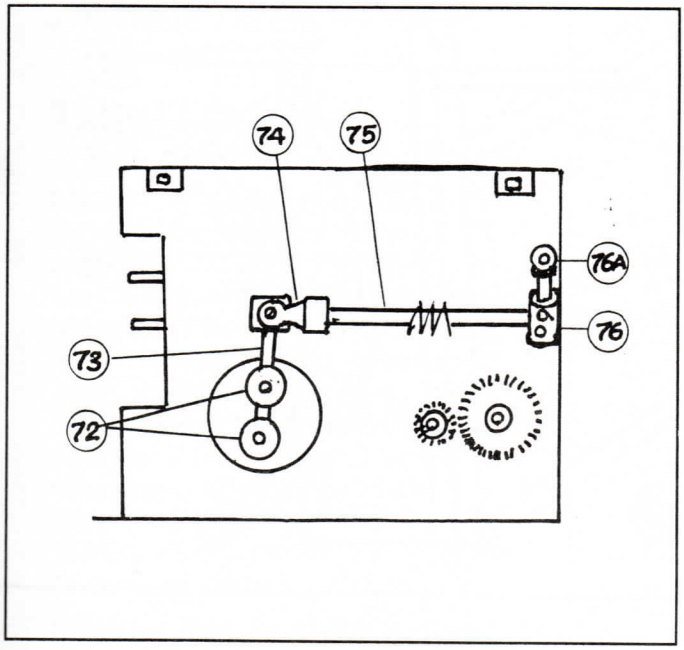

Fig. 4A. Motor Control (Stokys M1). (side view)

bolted to 24, (not shown). The lower end of Rod 71 carries a ½in. pinion meshing with Contrate 68.

3.4(A), Motor Control (E15R) (Fig.4)

Fig.4 shows the motor viewed from the front. A 1½in. Strip 72 is locknutted to one arm of the motor control level. Its other end is locknutted to a 2in. Strip 73 bolted to a Crank 74, which is fixed on a 6½in. Rod journalled in two Angle Brackets bolted to the corner holes of the motor sideplate. The rod extends behind the dashboard and carries a second Crank 75 fitted with a short Threaded Pin 76 to act as control handle. Adjust this arrangement as necessary to suit the model.

3.4(B). Motor Control (Stokys M1) (Fig.4A)

Fig.4A shows the motor viewed from the side. Two Couplings 72 are fitted to the on/off switch, and a 2in. Rod 73 is passed through the outermost holes of the Couplings. A Swivel Bearing 74 is bolted to the free end of Rod 73, and extended by a 6½in. Rod 75 journalled through Double Angle Strip 24 (Fig.1,2). A Short Coupling 76 on this rod is fitted with a Handrail Support 76A as a control lever.

3.5 Body (Fig.5)

The body is made in one piece; Fig.5 gives general information. The back (78) is three 5x11-hole Flanged Plates bolted together. For each side, bolt together from top to bottom, overlapping each one hole, a 9½x2½in. Flat Plate, 77, two 5x11-hole Flexible Plates, and in the bottom row a 5x5-hole Flat Plate, 79, a 5x11-hole plate, and another 5x5-hole Flat Plate. These are bolted at the rear corner to flange 81 of the back plate. Trim the top edge of each side with a 9½in. Angle Girder 80 on the upper edge, and two 9½in. Strips across the overlaps midway down the sides, with two Narrow Strips of the vertical overlaps. Across the upper front corners of the body brace with a 7½in. Angle Girder 80A. The sides are continued forward by two 3x11 hole Flexible Plates and two 5x11-hole plates, overlapped one hole (82) and edged top and bottom by 9½in. Strips 85, and trimmed by vertical 3½in. Narrow Strips 84. To this side assembly (82-86) attach the side of the engine hood, a 4½x2½in. Flat Plate 86 extended by a 7½x2½in. Plate 86A, edged top and bottom by Narrow Strips 87 and vertical Narrow Strips at plate overlaps. The two sides are identical.

The radiator is a 5x11-hole Flanged Plate 88, and across the rear of the hood (firewall) is another 5x11-hole plate 90. The top of the hood is a Hornby System of Mechanical Demonstration Perforated Stand (MW models replica, 50R) 89; or by four 5x11-hole Flanged Plates bolted together (adjust dimension by one hole). The radiator grill is made of five 6½in. Rods carried in the front holes of the hood sideplates 86, held in position by collars or spring clips.

Across chassis members 3, 4 starting at the fourth hole from the rear, bolt the back floor of the body. This consist of flat plates 7½in. long (of widths as available; not visible in Fig.5). Two holes behind girder 80A is the back 93 of the seat; attach a flat plate 7½x3½in. (or equivalent), by fixing two Trunnions to the floor. A 3x15-hole Flat Plate is fitted as the seat and supported at the front by two more Trunnions. An Angle Girder is fitted across the top of the seat back.

Across and beneath Angle Girder 3, 4 (Fig.2) bolt a 7½in. Angle Girder by its elongated holes, three holes from the rear. To it bolt three 1x1in. Angle Brackets (one shown at 10B, Fib.2) using ⅜in. bolts with washers as spacers. The back plate

78 of the body is then bolted to these brackets. The side plates are bolted to the frame at various points using Angle Brackets; three are shown in Fig.1. Between the free end of the 1½in. Double Angle Strip 69A (Fig.1A) and side 79, a 5½in. Double Angle Strip can be fitted as cross-bracing. This can also support any desired extension of the controls. A spare tire is held on the rear (78) by two Bush Wheels fitted back-to-back on a 2½in. rod.

The windshield is a 11x5-hole transparent plate, framed across the bottom by a 5½in. Flat Girder (not shown) and across the top by a 5½in. Angle Girder 102. Narrow Strips 98, 99, 101 (others not shown) brace the windshield from the sides of the hood, using washers and long bolts as necessary for clearance.

3.6 Fenders (Mudguards) (Fig.6)

The fenders are shown with Meccano part numbers in Fig.6, and are bolted to the chassis members by the free holes at the inner ends of the Double Angle Strips (48A).

3.7 Wheels (Fig.7)

Meccano® part numbers are shown in Fig.7. Under every Obtuse Angle Bracket (12C) on the front, bolt an Angle Bracket (12), elongated hole facing to the rear of the wheel and outward to the rim. The front wheels are spaced out by washers and held by collars on rod on 55. The rim (front and rear sections) is held together by four ⅜in. (9mm) bolts (111C). On the rear wheels, be sure the boss tappings of the Bush Wheels (24) are not blocked by the long bolts; these setscrews hold the wheels to rod 51. If 3½in. Circular Girders (143A) are not available, use the same structure for the rear as for the front of each wheel. The wheel design by Rick Collette for the Road Grader, *CMN* Model Plan 7, can also be used.

Comments from Jerry Dubois: The "Jeep" was built in the late '80s or early'90s, and has long been dismantled. Lacking pictures, some of my solutions are vague. It was my

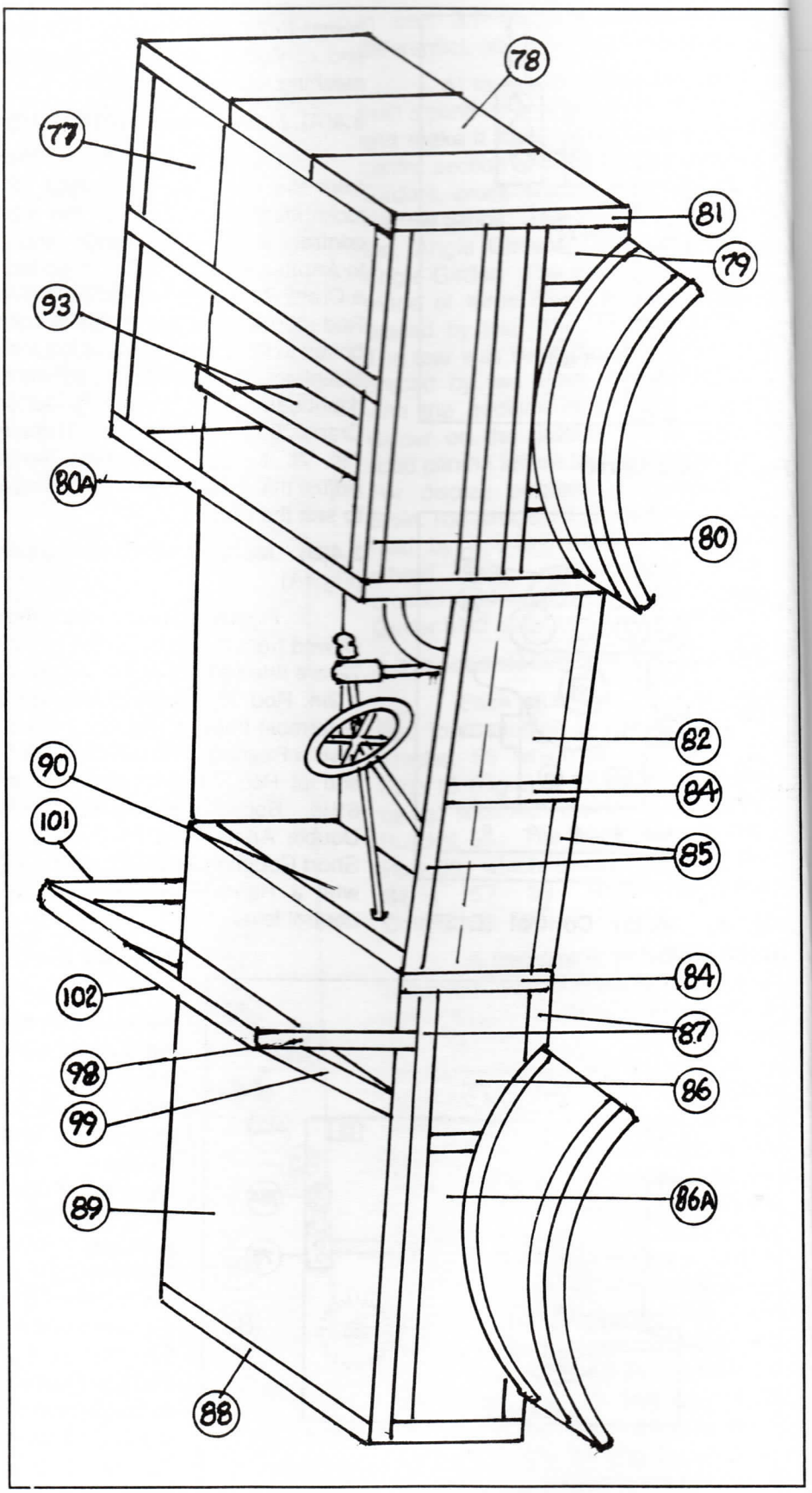

Fig. 5. Body

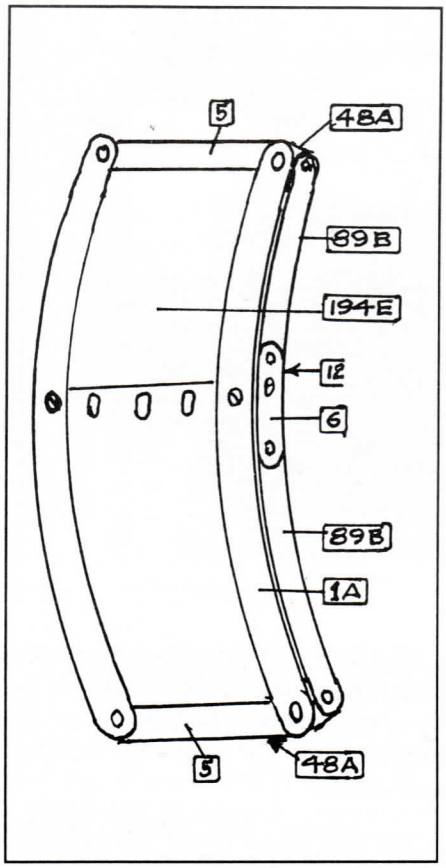

Fig. 6. Fender

first attempt at modelbuilding, so I was very pleased with it. As many parts can be changed to suit the needs of the builder, I did not compile a list of parts required.

Thought du jour

"Very few people can fix a car anymore, or a toaster or a radio. Yet many of the technical geniuses we celebrate ... report that their first experiences with technology were taking apart the family radio or fooling around with cars, home appliances or early computers. Now we're surrounded by technology so mysterious and opaque it seems to have been delivered by aliens." — Gary Chapman, director of the 21st Century Project, at the University of Texas in Austin.

Reprinted from the *Globe and Mail*, Toronto

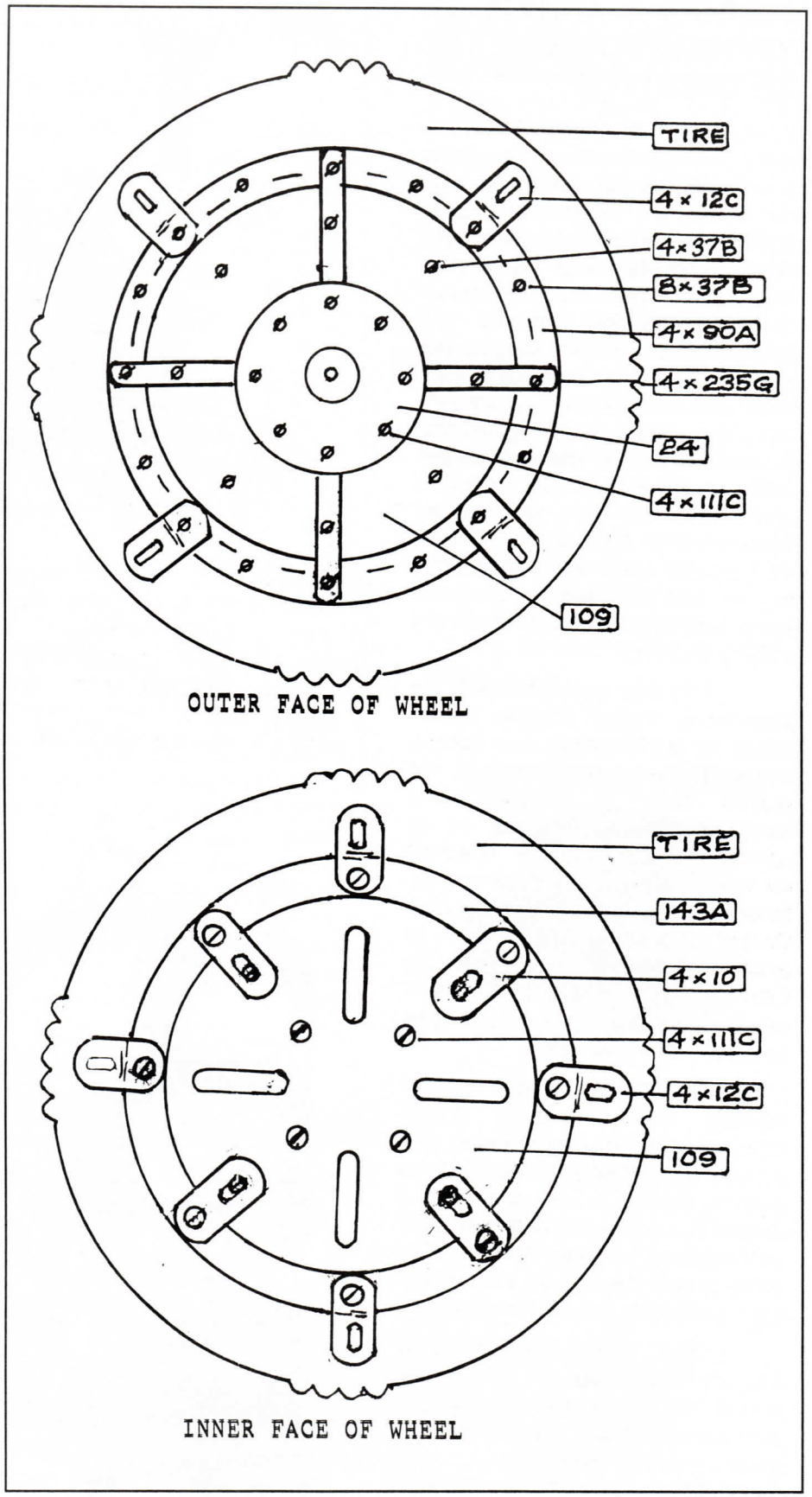

Fig. 7. Wheel

NARROW - GAUGE CONTRACTOR'S LOCOMOTIVE

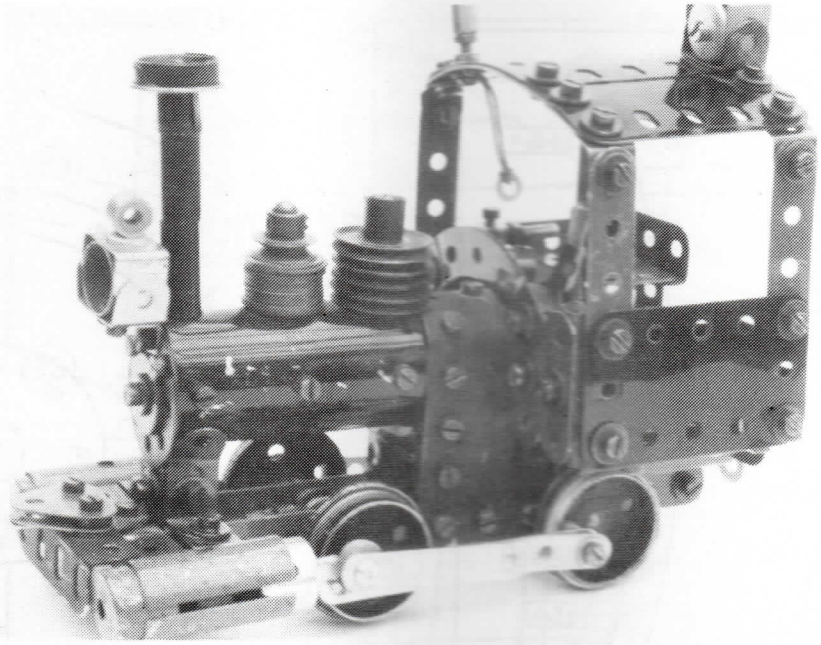

Before the time of rubber-tired earthmovers, narrow-gauge steam locomotives and dump cars were widely used on large construction projects, together with steam shovels and draglines. Prefabricated track sections were laid on roughly levelled ground, and rapidly shifted when the digging site changed. This model, typical of such small engines, is operated by one man. Many such small engines had saddle tanks for their boiler feed water —tanks of inverted u-shape atop the boiler itself—but the tank is not represented on this model. Simple link-and-pin couplings connect the engines and cars, though often the dump cars could be pushed without actually coupling.

This brief description and the illustrations should suggest possibilities for the modeler's own design. The frame strips 13 holes long are spaced apart by obsolete ¾in. Meccano® Double Brackets or by current Märklin Double Brackets (nr.10001) which are the same size. Sleeve pieces are hung on further Double Brackets outside the frame as engine cylinders. Note that the Chimney Adaptors in the rear of these cylinders are pushed into place open end towards the wheels.

The front coupling is made of stacked 1in. Triangular Plates attached to a 2in. Angle Girder, with a 1½in. Narrow Angle Bracket as the pushing face. The rear coupling is a Double Bracket (which also makes the pushing face) below a Fishplate. The boiler, a Cylinder, sits on a smokebox saddle made of Double Brackets.

The firebox, a 3x11-hole Flexible Plate, wraps around the rear end of the Cylinder and is attached at the bottom to the frames, spaced away by three washers on each bolt. Front and rear of the firebox are filled in with scraps of Flexible Plates. Construction of he smokestack and domes is obvious. Front and rear end of the boiler are Wheel Discs. Above the front, a headlight is made of ¾in. Double Brackets surrounding a Chimney Adaptor, and surmounted by a washer and a Collar. Another headlight is atop the rear of the cab.

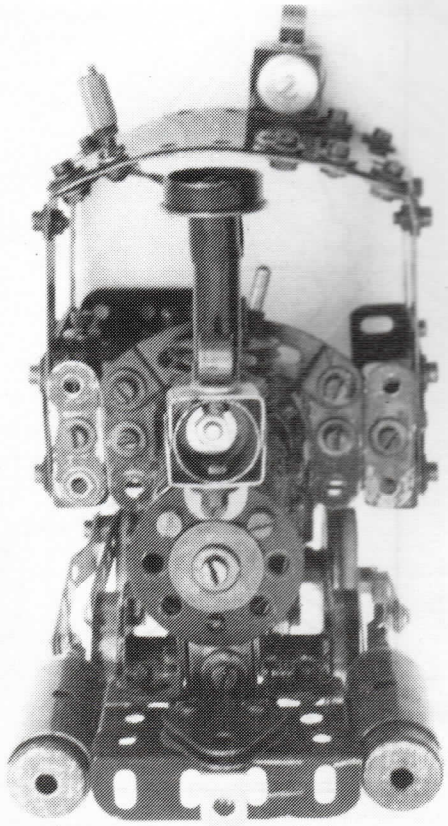

A Rod-and Strip Connector carrying a 1in. rod is the throttle lever on the boiler backhead. The boiler ends are held in place by threaded rod from front to rear.

Inside the frame, dummy valve gear is represented by two Rod-and-Strip Connectors carrying 1½in. rods, and spaced apart on the front axle. The forward ends of the rods are trapped behind the frame bolts by Spring Clips.

The cab floor is a 3x3-hole Flanged Plate (p/n 51b) and a 3-hole Double Angle Strip, flanges upward and extended sideways by Girder Brackets. The low cabsides are flexible plates mounted on Angle Girders. Strips at the corners hold the curved roof. On the right side, the driver's seat is a Trunnion overlain by a 3-hole Flat Girder. A Short Coupling fitted with a threaded pin is supported off the floor by a long bolt and Rod Connector and a 1in. Rod.

On the left side, the coal bunker is surrounded by Flexible Plates and short Angle Girders. A whistle cord hangs from the roof; the whistle shown is a Coupling Nut for threaded rod, mounted on a long bolt.

The dump cars are based on two 3in. Angle Girders, slotted holes against each other and pointing

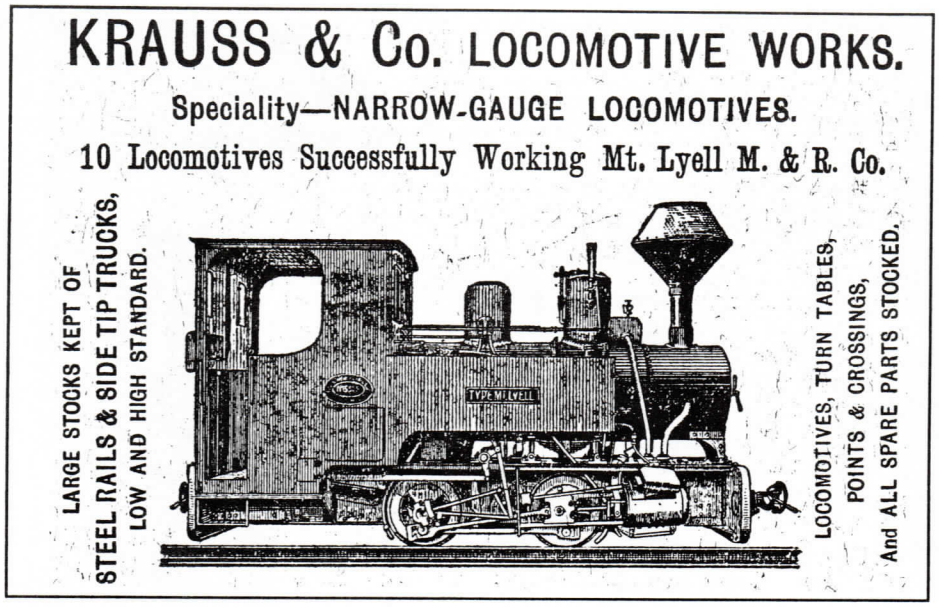

downward, with Angle Brackets on each side holding two Double Angle Strips (p/n 48a) joined end to end, and joined at the outer ends of the car by 1in. Angle Girders. To these are fixed two 5-hole Strips at each end to support the dump body, and the 1in. Triangular Plate couplings, again with Narrow Angle Brackets as pushing faces. Be sure that by using a Drift that the axles run freely; be sure the wheel gauge is the same as that for the engine. The dump body ends are Triangular Plates and the sides are Hinged Flat Plates. Track can be made simply of Angle Girders on suitable crossties. This model is of 2in. gauge. It makes a suitable push model for display at the front of a show table. Inevitably small hands will knock it off the track; reassure everyone that these models were made to be played with.

MeccaNotes

What's That Again?: In a copy of *Meccano Parts and How to Use Them*, the useful (but dated) booklet from Binns Road, of the "blue and gold" era (1934–37), some inexplicable curiosities: On the cover, the famous pontoon crane model of many years' standing, illustrated supposedly with blue/gold Strip Plates replacing the original Braced Girders—but the supporting bearing still using Channel Segments instead of the Geared Roller Bearing that supposedly replaced them. And on page 6, "For many purposes the 4" Flanged Sector Plate is too short in comparison to its length..." Howzat again? Further down the same item, "When bolted edge to edge these [Sector] Plates will be found to form an excellent rim for a heavy flywheel with a diameter of 9¾ins."

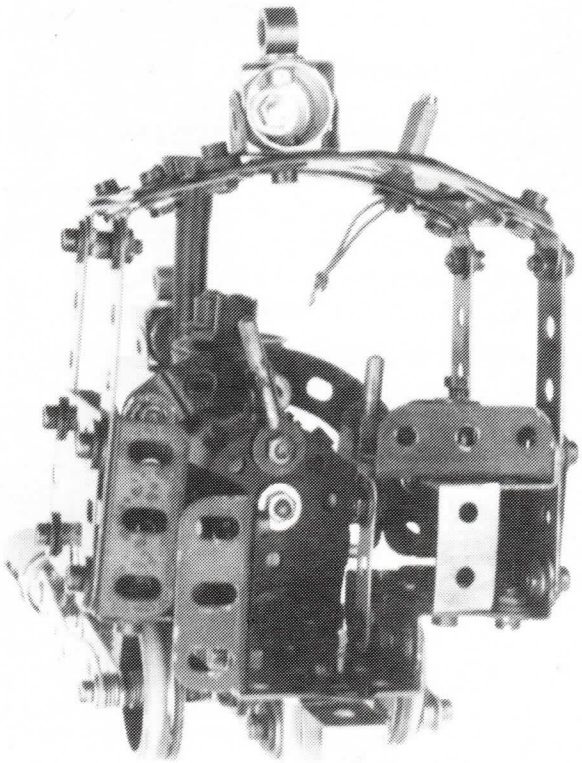

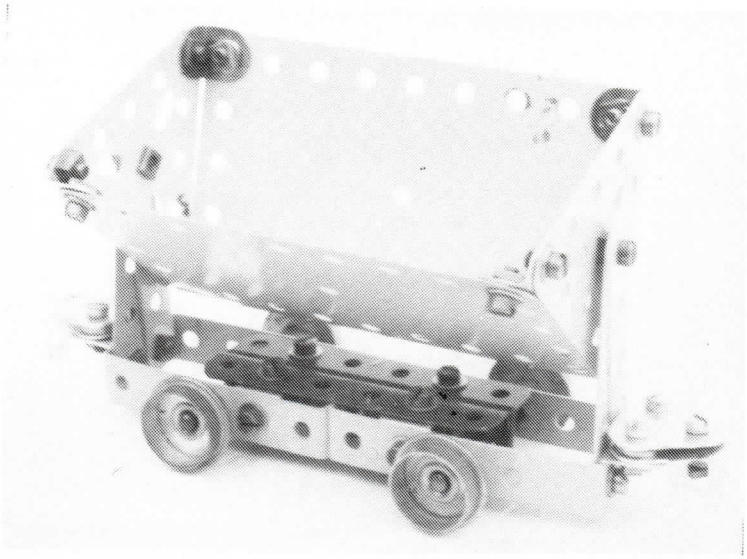

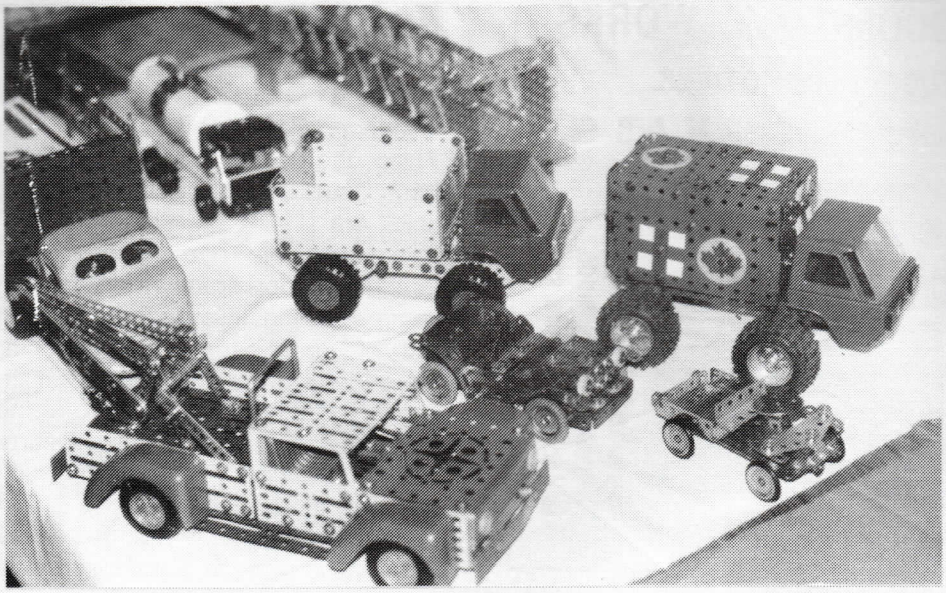

Canadian Toy Collectors Society, Oct. 20: Top, John Wapshott's "Other Systems" vehicles; middle, crane and well car from Bernard Champoux's O-gauge Meccano railway; bottom, one end of John's 8-foot Meccano Junior Bridge, with Jeeps; at right, Normand St-Aubin's "common parts" version of a heavy-hauler truck.

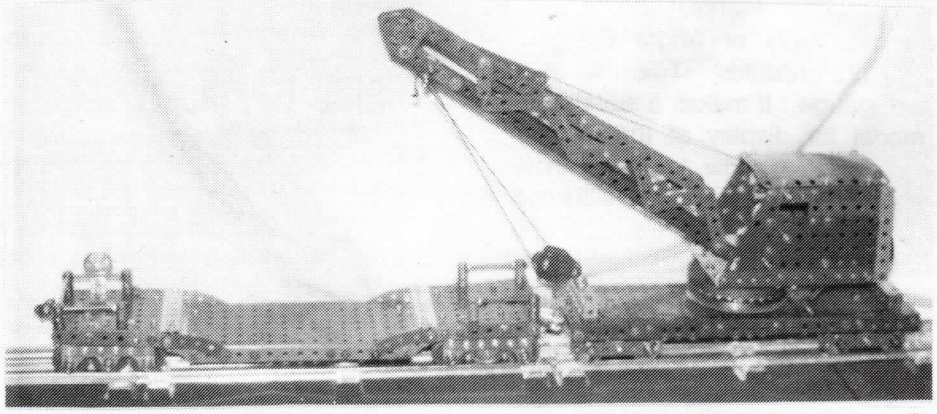

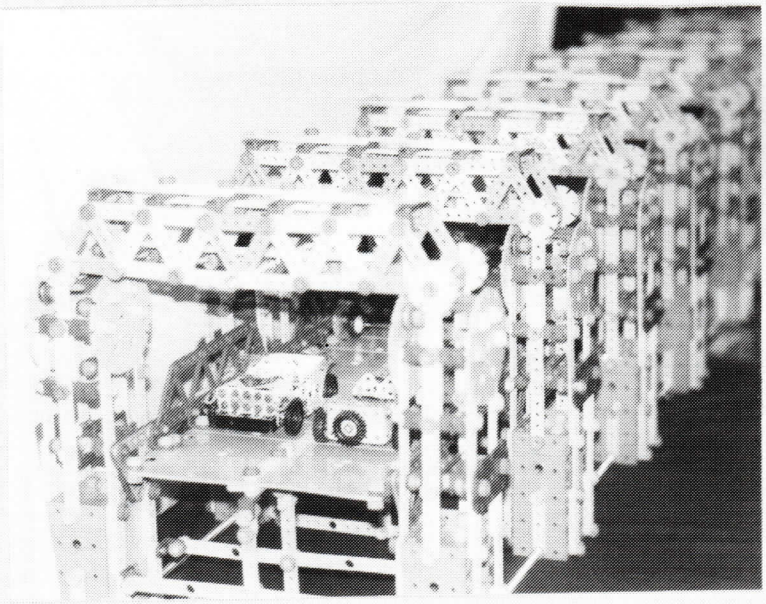

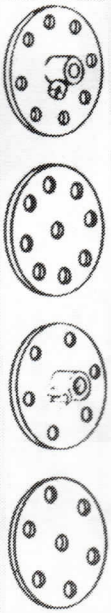

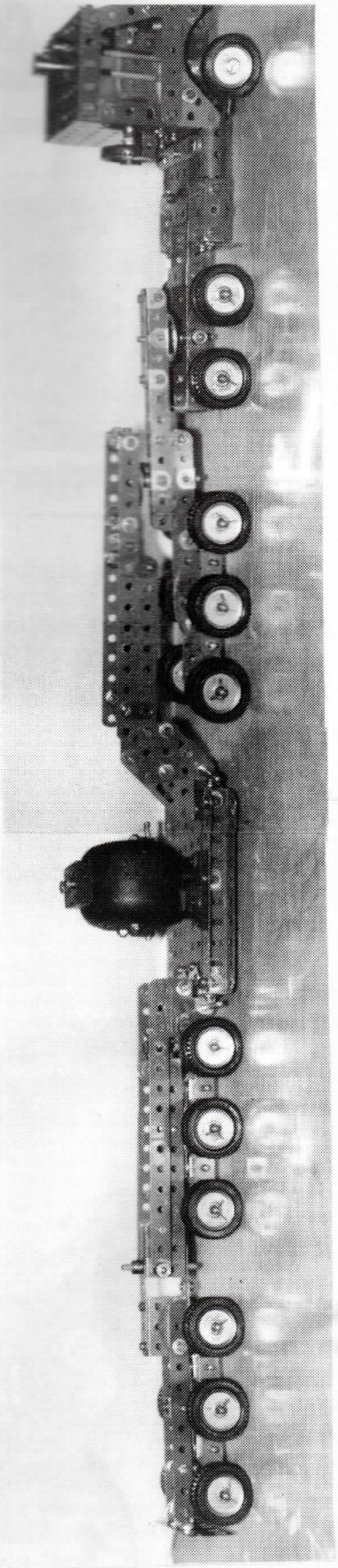

WORKBENCH
with HEIGHT ADJUSTMENT
by Norm LaCroix, using ISOMEC

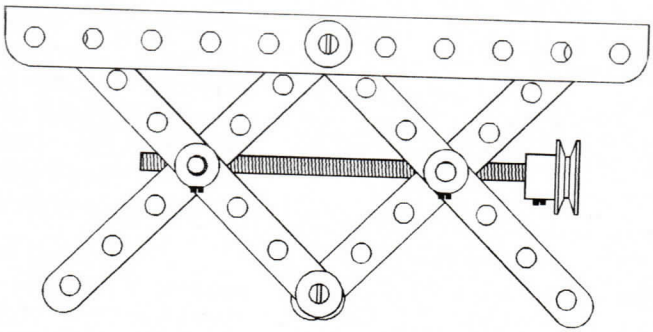

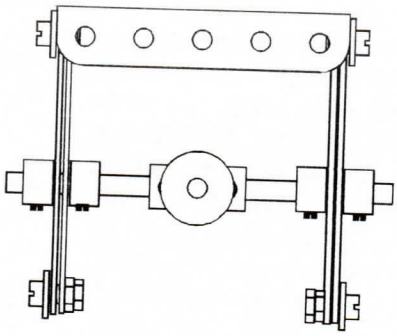

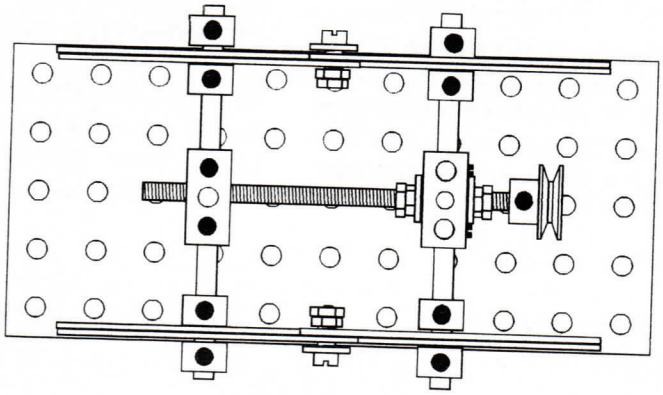

I am becoming a bit more confident in my experiments with ISOMEC and for the record, was able to produce the above illustrations in about 2 hours including 2 printouts in colour and 6 printouts using various weights of the lines.

The construction should be fairly obvious from the drawings; just make sure that the threaded rod passes through the threaded central hole of the left coupling and it passes through the non-threaded hole of the right coupling. All bolts are locknutted so that all narrow strips are free to pivot. The height of the workbench is adjusted by rotation of the ½' pulley.

I suppose that I'll have to build a life-size workbench like this in the near future????

NEW MECCANO PARTS–WHY NOT?

The Meccano® "hub disc" (which isn't a disc) and circular girder are Binns Road oddities. They have eight holes around the flat rim at 2½in. radius from the centre; but as they are only 5–5/16in. diameter, those holes are too close to the periphery to allow satisfactory bolting. As to the cylindrical periphery, this too has eight holes—separated by eight slots 1⅜in. long. The periphery is consequently too weak to carry loads for which it was obviously designed —in turntable bearings. Nor can the circular girder be easily used for wheels with six, nine or other numbers of spokes. The periphery can be reinforced by strips bent to curve inside or outside, but why not strengthen it by reducing the slots, while the flat face could be made adaptable by additional holes. Señor Richini could also make them from his heavier steel! (And see the item in the Ideas Column, about fitting nuts inside them.)

ONLY IN CANADA, EH?

Historical Notes About Canadian Construction Systems

II. CASTLE BUILDER

by Don Redmond and John Wapshot

Periods when imported toys are unavailable—usually because suppliers cannot fill the demand—are fertile times for home-grown toys. This seems to have been the case in the early 1940s when Meccano Ltd. was busy on war work, as seen regarding The Engineer, described in *CMN* in June (No.2). An earlier example seems to be Castle Builder, produced in Toronto in 1917–18 by the Castle Manufacturing Co., which appeared in the Toronto city directory only in 1917 and 1918. A manual survives, but so far no sets, nor extensive lots of verified parts, are known to have been found by collectors—though there is a report that a boxed set, perhaps the size of a No.2 Meccano set, was seen some years ago in an Ottawa antiques shop.

In the Toronto suburb of Mimico (now absorbed into the City of Etobicoke, part of Metropolitan Toronto) from at least 1910 onward lived a family name Jermyn. In addition to the widow of Thomas Jermyn, there were Percy V. Jermyn, and Percival T. Jermyn, who was a high-school teacher; and there are still Jermyns in the area. Percy V. Jermyn appeared in the 1913 city directory, in a house on the south side of Lake Shore Road; but he was not in 1914 to 1916 directories, though he was again in the 1917 directory. In that year he was listed as manager of the Castle Manufacturing Co., toymakers. His name disappeared after 1917. Percival T. Jermyn continued to teach after the war.

The Castle Manufacturing Co. was located at 69 Richmond Street in downtown Toronto, in a small building in the same light-industrial district in which in the 1940s Armstrong Bros. would produce The Engineer. In the 1918 directory the Castle Manufacturing Co. had moved to 80 Duchess Street, near Parliament Street, sharing a building with the L. McBrine Co., well known manufacturers of luggage. But the president of Castle Manufacturing Co. was now listed as F. Harry Fotheringham. In the name section of the same directory the entry for Frederick H. Fotheringham listed him as sales manager of the Reginald N. Boxer Co. Ltd., wallpaper manufacturers. In 1919 Castle Manufacturing Co. was gone from the directory.

This does not seem to be a case of a business changing name. Dominion Toy Manufacturing Co., novelty makers at 60 Front Street, did not appear until 1920, its president Aaron Cove. Canadian Toy Manufacturing Co. appeared in 1921 at 186 Adelaide Street West, about a block from 136 Adelaide where

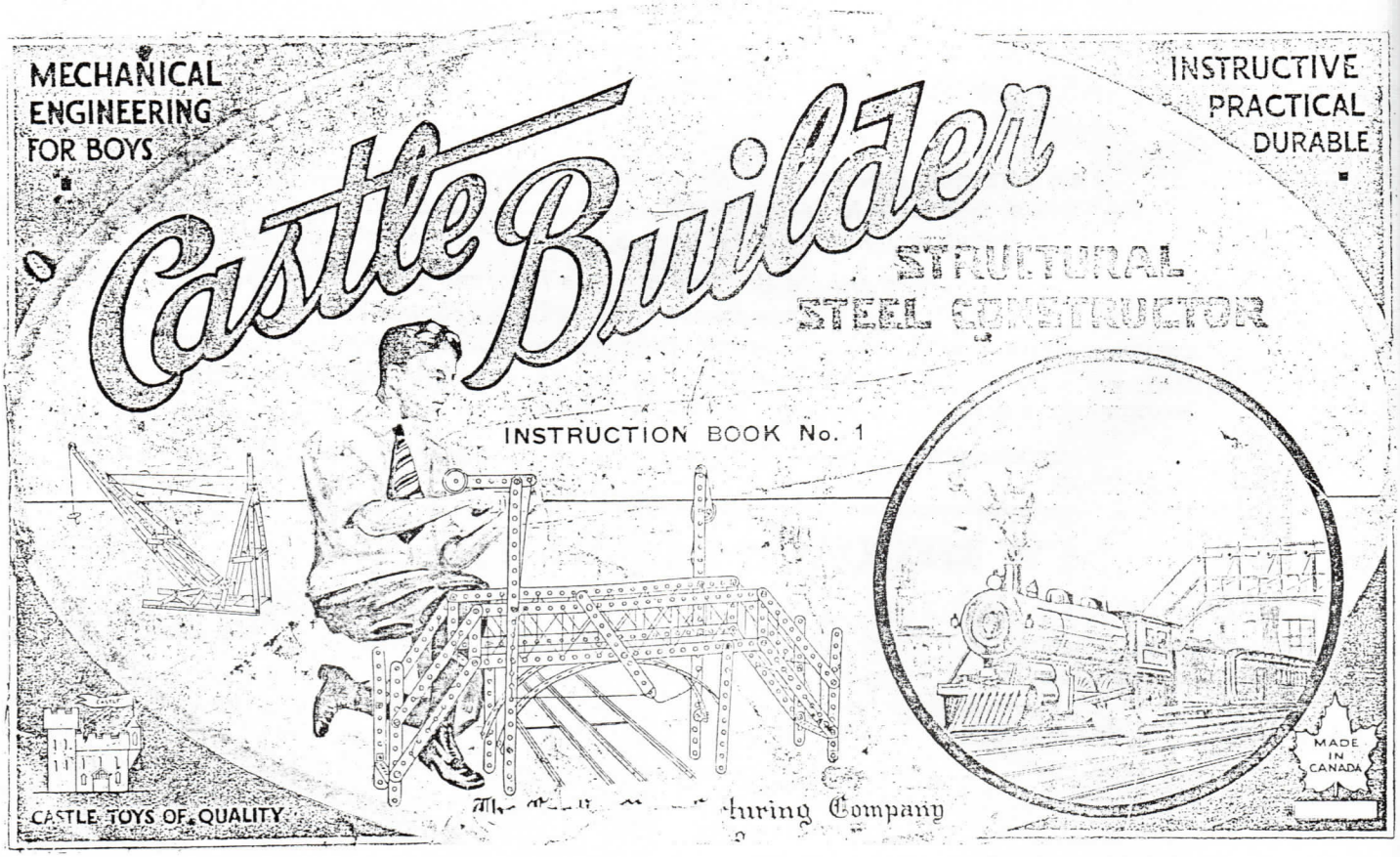

Armstrong Bros. would later make The Engineer. Moffatt Toy and Novelty Co. were also in 1920 makers of mechanical toys, novelties, dies and stampings, at 113 Roncesvalles Ave. (rear). Dominion Toy had in 1922 moved to 157–165 Queen St. E. and the Earlscourt Toy Works Co. Ltd. were at 155–157 Morrison Ave. None of these firms appear to have any successor connection with Castle. Coincidentally there was in the directory from 1916 to 1921 one Richard H. Castle, metal worker, at 172 Margaretta Street—but he seems to have no discernible connection with Castle Manufacturing Co.

The Instruction Book No.1 of Castle Builder Structural Steel Constructor, of which photocopies survive, is a 16–page oblong manual 165x265mm with a well–designed wrapper. It bears corner legends "Mechanical engineering for boys," "Instructive, Practical, Durable," "Castle Toys of Quality," and on a maple leaf "Made in Canada". Undated, it gives only Toronto as an address. The usual introductory blurb on page 1 notes that "Castle Builder parts are interchangeable throughout all its different sets, as well as with those of other steel building outfits." It urges buyers to "sign and mail the enclosed post card," long gone. Pages 2–3 illustrate and list parts 1 to 56, including woodscrews, cord, and electric motor ("see special list"), and Complete Instruction Book. This latter was evidently more imposing than Book No.1 which shows only models built with set No.1. Headings on alternate pages boast "Canadian Toys for Canadian Boys," and "The Only Steel Builder Made in Canada". Page 4 shows "A Feature of Castle Builder Sets," namely that sector and rectangular plates have no flanges, but that angle girders may be bolted to them to make flanges. Pages 5–14 show 29 simple models, much the same as those in introductory Meccano manuals of the time. Page 15 lists contents of Sets 0 – 7, including accessory sets 0A – 6A. Set 7 contained 12 12½" angle girders, thirty 12½" strips, 250 screws and nuts, 72 angle brackets, and so on—roughly comparable to a Meccano 5A accessory set of the time, except that Meccano had 65 different parts to Castle Builder's 55.

Of the few Castle Builder parts identified or suspected, not many are distinctive. The screws are #5–40 x ½in., an unusual size and much longer than necessary; the nuts are 5/16in. (7mm) square and rather thick. Oddly, the illustrated parts list closely resembles those of two contemporary American construction systems, American Model Builder, and Modelit. Both of these were early

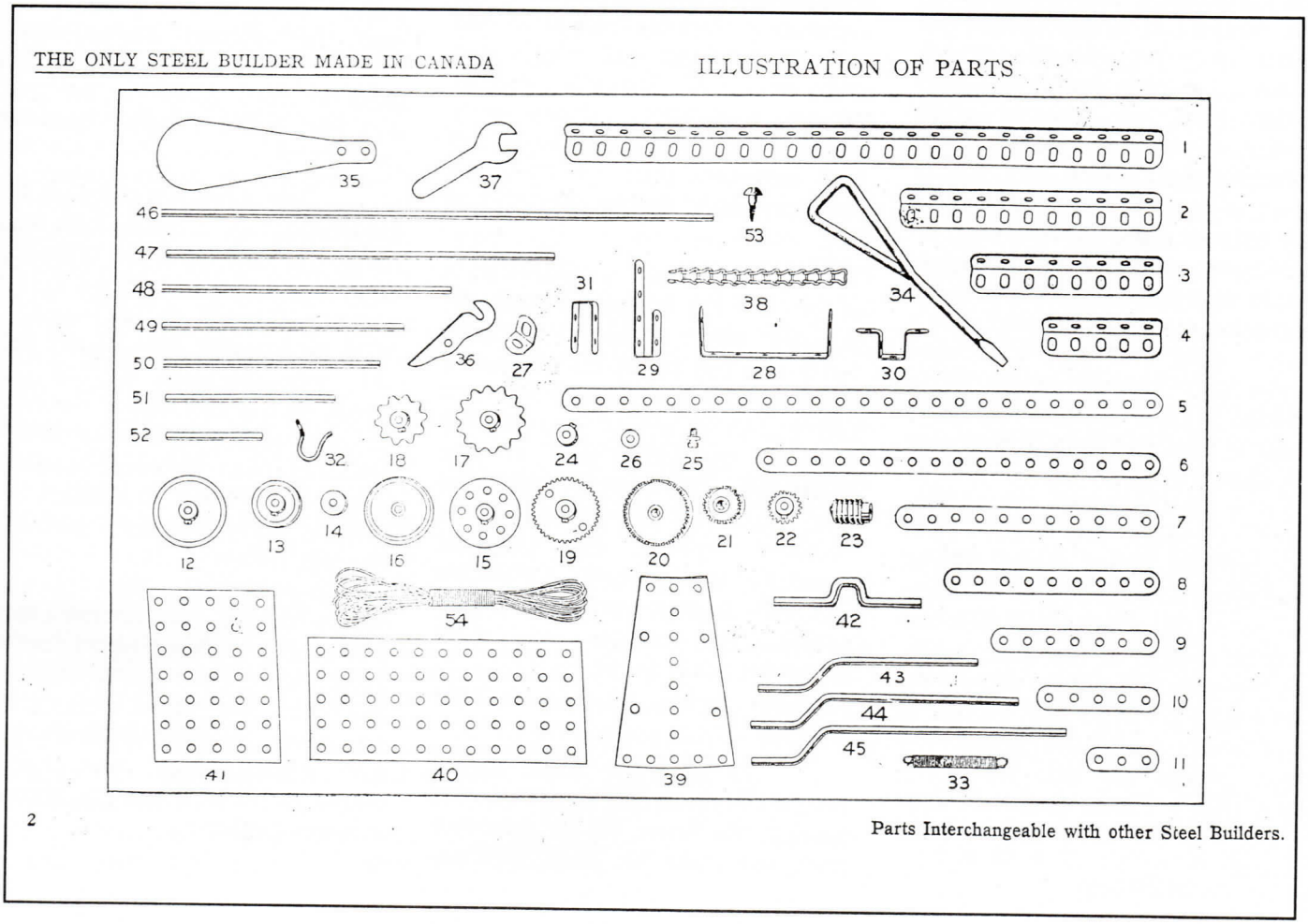

imitators of Meccano®. AMB, from Charles Wagner's American Mechanical Toy Co. of Dayton, Ohio, was one target of Frank Hornby's litigation for infringement. All three systems have three lengths of crank handles; a broad spatulate straight-sided propeller blade; a "hanger strip" like an uneven double bracket (4 holes in one arm, two in the other); and a railway wheel with flange (while Meccano® still had a flanged pulley wheel). AMB and Castle Builder used the old Meccano® style of sheet spring steel pawl, while Modelit and Castle Builder had 5x7 and 5x11 hole flat plates but no flanged plates. Their two sizes of crown (contrate) gears were machined with a cylindrical exterior face, while the hook was a short-shanked broad loop with flaring tip.

The most distinctive part was the sector (tapered) flat plate 4in. long, 3 holes wide at the narrow end, 5 at the other. The Castle Builder parts list shows a plate with reduced ends, narrow end concave, broad end convex, the two curves parallel. However, the plate found as Castle Builder has two *straight* ends. Another system, Canadian Steel Instructor, about which very little is known at present, has a similar flat plate but with a straight *wide* end and a *concave* narrow end. Another sample of a flat sector plate in the possession of another collector, has a *convex* wide end and a *straight* narrow end. Modelit (phase 1) is reported (in *Other Systems Newsletter* p.186) to have end holes of both wide and narrow ends on circular arcs so that they are at constant 4in. centres. Castle Builder, like most other systems with sector plates, has all holes on a rectangular grid. Its angle girders include a 4in. girder intended to fit as flanges to the sector plate, and the outer holes at the ends of the sector plate are larger than the rest, to allow for the skew of the girders. The angle girders are also distinctive, being nearly 15mm broad on each flange, with only minimally rounded corners.

It may be noted that American Model Builder originally used a Meccano®-style sector plate, and at some point dropped it in favour of a "universal" plate 4x1½in. with one long flange, and holes only in pairs—apparently to avoid a Meccano® patent. Modelit, in going to a 'phase 2' style, also dropped the flat sector plate in favour of three-cornered gusset plates (and alternative round and square holes in strips!)

None of the distinctive Castle Builder parts appear in the models in the No.1 manual—and hardly until the No.3 or larger sets.

What theory can explain the brief life of Castle Builder? We propose that Thomas, Percy V and Percival T Jermyn were three generations of one family; that Percy enlisted at the outbreak of the First World War, served overseas, and was perhaps invalided home in early 1917. He established a small firm to manufacture a construction system in imitation of Meccano® which he had seen in England, but which was unavailable in Canada midway through the War. Plans were ambitious, for a range of seven set and accessory sets, the same as American Model Builder (Modelit had five).

Percy V. Jermyn was likely a victim of the Spanish influenza epidemic which struck so many in 1918-19. The Castle Manufacturing Co. was sold to F.H. Fotheringham and moved to a new location, but failed in the same year or was deliberately closed when, after the War, Meccano Ltd. resupplied its Toronto agency (or perhaps threatened legal action?). Large sets of Castle Builder would be rare or non-existent, since few such expensive items would be a first toy purchase in the uncertain wartime era.

Some details about Castle Builder: Material and finish, nickeled steel; screw thread #5-40; diametral pitch, estimated 30; parts, 54; hole pitch 12.75mm; hole size 4.2mm (4.76mm in corners of sector plate); bosses bored 4.0 mm; axle size 4.0mm; square nuts 7.8mm; bolts round head, bright steel, head 5.74mm.

Additional information about any Canadian made construction system will be welcomed by the Editor and others sharing in the research. Photographs are particularly wanted.

THE ENGINEER: POSTSCRIPT

CMN in June described "The Engineer", a metal construction system produced in Toronto in the Second World War period. Only one actual set had been found, though parts from the system had been found in some quantity over the past year or two. A second Junior set turned up at the October Canadian Toy Collectors Society show (see article elsewhere in this issue). This set included a manual different and possibly later than the isolated manual found earlier. The newly found manual lacks the word "Junior" on the cover, and had halftone rather than line illustrations.

The Junior set cylinders bear the legend "Distributed by John Stuart Sales, Toronto, Montreal, Winnipeg." John Stuart, born in Glasgow in 1908, came to Canada as an infant. In 1936 he founded John Stuart Sales Ltd., with premises at 7-9 Duke Street, on the east side of downtown Toronto, occupying the first floor as manufacturers' agents, apparently leasing other floors to tenants. The firm was highly successful, expanding into the United States in 1948 and then internationally. By 1990 it was Stuart-Andrew International Ltd., in Scarborough, while in North York was Stuart House Canada Ltd., makers of aluminum and paper products and packaging. The Stuarts, three generations named John, had all retired and Duke Street was absorbed in urban growth.

IDEAS

Stripping Strips: The many ideas for removing paint and rust from Meccano® parts don't seem to mention the problem of old nickel or zinc plating. Use a "flap wheel", a drum edged with small flaps of abrasive paper. They come in sizes for use in an electric hand drill or on the spindle of a bench grinder. A flap wheel quickly removes old finish down to bare metal and leaves a polished surface ready for refinishing. No liquid mess from paint remover; quickly used for single parts. *Wear eye protection and heavy gloves.* A flap wheel does flat plates too, but won't get into the corners of flanged plates. It is good for getting rid of the "veined" rust often found under the enamel of 1950s plates.

Stripped Bolts: Bolts often strip if a nut is severely tightened too near the tip. Don't throw them away. There's often a need for a short bolt in a crowded corner---and while short bolts exist, they're not a standard item even in the MW list. A quick way to salvage the stripped bolt is to cut it off with a bolt cutting tool. This is one of the features in a multi-use plier such as Stanley 84-203, an electrician's tool which also strips wire, crimps electrical connectors and makes fine bends. Meccano® bolts (5/32in. BSW) can be cut cleanly in the #8-32 setting of a North American tool. Voila—4mm (3/16in.) bolts!

Offside: (That will catch the hockey fans!) Occasionally the Meccano® nut-making machines produce a lopsided nut, in which the tapped hole is not in the centre but well off to one side. Save these rare nuts (but don't bury them like the squirrels!) They are ideal in tight corners—such as the holes in the face of hub-discs, which are so close to the rim that ordinary nuts will not fit.

Timely Tip for Tattered, Torn Terminals: When you have finger - tightened nuts and bolts by the dozen, is your skin scratched torn and marked? Have the tips reached the point where they are so sensitive your nerve ends are crying fro relief? A surgeon would be proud to have such sensitivity at the end of his fingers! A perfect solution is to raid your mother's, wife's, girlfriend's clothing repair kit (sewing basket) and beg, borrow or steal her rubber finger thimble. I have the original nearly worn through, but do not despair. They can be purchased at a stationery store or office supply store. "Venus Thimblettes No.1" (various sizes, about 30¢; buy two and save an extra trip; and next time you add n&b's to your masterpiece model, give thanks to *CMN* and SJD.

A Last Mutilated Use: Many are the grumblers about part 198, Hinged Flat Plate, being useless. The *West London Meccano Society Newsletter* reports John Macdonald's useful adaptation; cutting hinged plates down to hinged pairs of 9-hole strips. John uses them for hinges on ambulance doors. [Long hinges of this type are known to the hardware trade as piano hinges. The old Mutilator welcomes John!—Ed.] Also Colin Davies' 12 spoke locomotive driving wheels (for the Rocket) based on p/n 145, 7½in. Circular Strip. "unfortunately, the spacings of the perimeter holes do not lend themselves to division by 12. The problem has been overcome by using a pair of 12½in. strips each run through a strip bender to form a semicircle, which when connected together give 48 half-inch spaces round the perimeter. Twelve Narrow Strip spokes were then connected to the "tire" every four holes. The Circular strip fit exactly inside the tire..."

Bent Bracket: Bernard Champoux reports finding a Meccano® part which should be dear to the Old Mutilator. Sketches show a perspective and side view of an angle bracket of which the slotted arm has been bent double and clasps a cheesehead bolt. Possible uses might be a close corner without room for normal angle bracket; or as an acute-angle bracket (which is lacking in the Meccano® range). Or a gun turret for a miniature model?

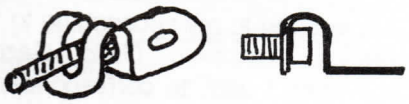

Cylinders and Press Rolls: For models in which a sheet of paper must be carried over a cylinder or roller, such as a printing press or the Super Meccanograph (*CQ*2), it is often difficult to maintain traction; the paper slips on the metal roller. A Montréal modeler suggests: Try covering the couplings or your cylinders with heatshrink plastic tubing, available at electronics part suppliers in many sizes. Before assembling the cylinder on its shaft, with grubscrews, etc., clean it to remove oils from your hands. Cover the 'driver' cylinder only with the heatshrink tubing. Clamp the cylinder between two Collars at one end of an 11½in. rod and slide on the tubing which should be a loose fit. Turn on a burner on the kitchen stove to high heat and wait until it is hot. Rotate the cylinder half an inch to an inch above the burner. Convection heat will shrink the tubing. Do not overdo it, or the ends of the tubing will knurl up. Pierce the needed setscrew holes. For couplings, two layers of heatshrink tubing may be needed; one suffices for larger cylinders.

Cyclograph Shortcuts: Our Montréal friend suggests, when undertaking a task as complicated as Tony Rednall's marvellous Cyclograph (*CQ* 14, Dec 1991): *Take a fresh look*! (Who had the Cyclograph at one of the Canadian shows? Can we see it again please?) Also he reports that threaded *brass* rod is available in 3ft lengths in NC 8-32 size, and is easily re-threaded 5/32in. BSW to use with Meccano®, and cut to length as needed. The brakes which prevent backlash in the cyclograph are Meccano® Elektrikit contact studs, which rub on Bush Wheels. The Elektrikit parts are expensive, and the metal-to-metal contact is not a good

(continued on page 25)

DOWN MEMORY LANE

By S.J. Dubois

1926, 24th December: Late evening, two young boys, five and seven years old, half asleep, are sitting on the top stair, peeking at their father and mother and big sisters decorate the Christmas tree. Their imaginations are full of skates, skis, toys, candy and food (to act as filler) to be delivered by *Père Noël.*

25th December: Early, very early, you find the boys, plus the tired but happy parents, opening all the goodies. Included was something very new in Canada, *Meccano.* It did not take long for modeling attempts to be undertaken. Many were the severe cold days spend at this fascinating toy. For a few years, spare parts were acquired; but fortune and other plans took over, and unfortunately Meccano® was lost or otherwise disposed of.

1961, 24th December: Two youngsters, 5 and 10, brother and sister, are re-enacting 1926; but this time both are helping and in no uncertain terms have made their choice known, by Father Christmas or otherwise.

25th December: Early etc....Included was a commonly distributed toy, in a bigger box, but the basic material still identical to yesteryear's: Meccano®! The lad, being curious, also helped by fondly remembering Dad, was not long in recreating 1926. Every year following, the Meccano® inventory increases and models got more complicated.

High school was reached, and between sports and girls (plus some study), Meccano® started taking a back seat, way back; but the father never lost interest, although no kindred spirits were found to share his interest.

I digress here to add that my career had taken (solid?) footing on the steel deck plates of movable steam engines as a CNR Fireman, where I was eventually promoted to Engineer (engine driver) till pension time, but that is another story. There were quite a few railroad modelers in the fraternity with a wide knowledge of Meccano® products, but unfortunately these were used as accessories, not as a hobby.

My brother, who was a lab technician for the Government, used to pass on a few surplus parts that were at the time used in various experiments in their department. Then entered the Computer Age. Knowing of my interest in Meccano®, he asked me if I could use spare parts and gears, of which the department was disposing. Seeing he was my brother, I only tugged my forelock rather than get down on one knee. The cornucopia of material pleased and amazed me. Later on, he noted that given all the waste, plus what some senior staff (management!) got away with, he could have gotten me much more —water under the bridge.

That really got me going (all those gears!) in expanding my Meccano® collection! I had been subscribing to the *Meccano Magazine* for years, plus the *Meccanoman's Journal* (G. Maurice Morris), so I noted the parts suppliers and picked one at random. You must understand here that most of the odd parts I was ordering from my local dealer had to be ordered from English suppliers. It took six to eight weeks for me to get them. By going direct this was reduced to four to six weeks; when building a model, it helped. MW models caught my eye—a wise choice. This led to a fruitful business acquaintance and friends that are still being expanded. Through these connections I began building Super-models (the Midlands Meccano® Guild ones) by purchasing the added parts from MW, at the same time getting the needed parts to complete a No.10 set, the goal of most Meccano® boys! This also led to my subscribing to the *Midlands Meccano Guild Gazette* and, need I add, to correspondence with Ernest Chandler. I must state here that Ernest (and his family) have become solid and dear friends; plus the full roster of the Midlands Meccano Guild, and many, many more. In one of Ernest's early missives he steered me to Norman LaCroix of Petawawa, Ontario (200km from Vanier/Ottawa), who at that time was endeavouring to gather Meccano® enthusiasts by starting the *Canadian Meccanoman's Newsletter.* Strange are the ways and byways of this hobby! By this, and the International Hobby Show in Toronto, my lonely hobby got to be a wide circle of new and fascinating friends; it took only twenty years. Now the circle expands at a faster rate, much because of the advanced communication network. No, I do not have a computer! My son has more than he knows what to do with. I asked him one time, "do you need all that?" and I got the classic answer: "Do YOU need all THAT?" End of conversation.

I had by this time build up a No.10 set plus, and like others started to hunt flea markets, car-boot sales, etc. The Canadian Newsletter came out with a marvellous sale ad of a Meccano® collection; two No.10 sets, extra sets, motors, parts and *Meccano Magazines.* Fortunately at that time our company (CNR) and the union reached an agreement of a thorny wage and back-time situation, so having a few dollars to spare after buying a new TV and other things, I made immediate contact with the seller. This collection was in Montréal (160km away). As I was an engineer on the Ottawa-Montréal passenger runs, I phoned and made an ironclad agreement of sale. After talking my son-in-law (a strong chap) into coming with me, we drove to Montréal to finalize and pick up the collection. It was a Meccanoman's dream come true! I finally had enough! Magazines in abundance, which gave lots of spares for trade or sale; the same in Meccano®! Now I was modeling with three No.10 sets plus—

the last word in the sentence was of course not true!

The hobby shop owner nearby has reason to know me. Though he does not deal in Meccano® anymore (unfortunately), he gets in touch with me when someone in his shop makes Meccano® inquiries. A few years ago he phoned and gave me information about a chap having a No.7 set he wanted to dispose of. Just having been steered to a No.7 set of very poor quality, in a broken box of bent and misused parts, that I bought mostly for nuts and bolts and a few girders, I was in no hurry. After a few weeks my conscience bothered me and I said that I *must* follow through, if for no other reason that to keep these avenues open. Naturally it was the other side of town, way the other side. When I reached there, it was a very nice, large home. The gentleman who answered was about my age, I found out. He had just retired and sold his home, and the movers were coming in a few days and he was going to southern central Ontario where his children resided. Politely listening to all this, I eventually inquired about the Meccano® set. "Come to the garage," he said. "Ho Ho," said I to my self, "another one." He then explained that it was not a No.7 but parts he had built up to a No.7 plus (he was sure). He then produced a beautiful cabinet, compartmented, full of red-and-green Meccano®, gears, etc.—the majority in very good condition, the rest all useable! Taking a deep breath, I explained that I had lots of Meccano®; I had a few pictures with me for proof. He was interested, and glad his collection was going into caring hands. I then proceeded to hedge around prices, etc. Then he said, "No, no, I don't want to sell it—I just want to give it to somebody that knows what it is and will take care of it and use it to build models." I nearly lost my breath—thanked him profusely—took it home and at the first chance inventoried it. The collection was worth over £500, *then*. Also there was the time...but that is another story. I may get around to hearing a few of yours some day!

I kept acquiring "things" until my room was overflowing. I finally realized that there was only so much I could keep, so many models to build and store (to show and admire), that I decided to clear out extra boxed sets, plus spare parts. Spare parts are the ones you look for after you have sold them!

Now I have only a few more extras of which I am trying to dispose. My friends in Canada will be glad to hear that!

During all this time I have endeavoured to fill in my *Meccano Magazine* collection from the word "Go." I have what has been described as a very good collection. Having started late in life, and considering how far back *MM* collectors have to go, the early issues are very difficult to acquire. Also the condition of some material is fair to poor, to say the least. Adding the cost, it can get dicey.

The supply of "other" Meccano® publications is easier to obtain. I subscribe to three from England, two on Canada, one from the U.S.A. and one from New Zealand. I have also gone to the trouble of buying all the back issues of these magazines. So adding the G. Maurice Morris publications, and the Cavendish Books volumes, my library is extensive. In fact I have reached the sad conclusion that I must dispose of something. The "Binns Road" *Meccano Magazines* were selected; that will probably have happened by the time this reached the printers.

So now I can build one or more fairly large models and leave them assembled for a while, without too much worry about parts if I dig in and start another one.

Some of my meanderings have been published/criticized/praised, etc., and I hope to follow with more. I am not a Bert Love (prolific author) but I "have an eye".

Ten years ago I was very fortunate to be able to take a voluntary early pension. This is happening more and more these days with one exception. The people are more or less found out. Progress! This has helped my participation in the hobby immensely. By drawing from savings, etc., and what you more and more see on cars, vans, etc., "courtesy of my children's inheritance", I am visiting worldwide Meccano® enthusiasts. So you may see and hear me around your models, parts, etc., photographing and asking penetrating (silly) questions. Look for me!

IDEAS *continued from page 22*

brake. Instead he recommends a soft leather strip backed up by a 5-hole Strip, with a long threaded pin (115a). The leather strip straddles the Bush Wheel and is a better brake. About sixty Rod Sockets (p/n 179) are used in the Cyclograph—at about $5 each! Instead, he threads ¼in. at each end of rods which are longer than Meccano® 11½in. rods, eliminating the mounting sockets. Even the paper used is expensive; the 3in. roll paper is not a standard item in stationary stores, whereas 2¼in. adding machine rolls are cheap. Since the designs do not cover the whole width of the paper, the table and rollers can be smaller. Don't hesitate to change an existing model, says our Montréal friend. Sometimes a model can be built as well or better with finite resources —not all of us have infinite supplies of Meccano® parts.

Nonskid, Non-Noisy: A half-inch slice of wine-bottle cork, jammed into a ¾in. Flanged Wheel, makes an effective non-marring silencer and nonslip foot for a model.

Shiny Brass: Seen on TV: an antiques expert recommends a polishing product called microcrystalline wax, for protecting the bright finish on brass. He used it on candlesticks, but who'll try it on Meccano® brass? The usual method of preserving bright brass is clear lacquer; there are special lacquers for use on brass.

NOVEMBER HOBBY SHOW, TORONTO

Meccano® got advance publicity on CBC Radio's "Ontario Morning" show when a Meccano® kit accompanied the show announcement. Radio host Joe Coté and a colleague chatted enthusiastically about Meccano®—Joe admitted he had never had Meccano® when he was a boy, and they talked about fumbling with "those tiny nuts and bolts".

CMAMAS (billed in the show program as the "Canadian Meccanomen") had 16 tables around the edge of a vast open area in which Phil Edwards raced his Ferrari chassis and Mike LaCroix, now a University of Waterloo math student, gave a juggling floor show. Some twenty Meccanofolk took part, traded parts and stories, held the *CMAMAS* annual general meeting, and departed swiftly but tired when the show closed at 6pm Sunday.

Going around the tables: Jerry Dubois displayed a portrait of Frank Hornby framed in a green Circular Girder. His small version of the Sangster Meccanograph, and his Keilberg (Cameron) Carousel held onlookers. Charlie Pack's traction engine, to a Brian Rowe design, **(4)** had to be mounted high so viewers could see the fine detail under the spreading canopy. It was accompanied by a fine farm tractor from a *Meccano Newsmag* 1995 design, using a TemSi PDU motor.

Manfred Hammer's Fine 0-6-0 tank engine (MW Modelplan 90) covered its track, beaten for slow pace only by his two-car monorail (MW plan 69) in blue with VIA Rail logo—the slowest VIA train on record! His miniature machine shop, chiefly in black and dark blue (*Newsmag* Constructorproject 16) crammed a lathe, drillpress, punch, circular saw and planer into a space only 9½x4½ inches. For good measure Manfred had built the Trislander aircraft from the September *CMN* (see picture), in yellow/zinc **(1)**.

John Worfolk's battery of artillery and military vehicles in olive green was a contrast to his steam power plant. Lou Boselli had brought sample models from the 1996 Meccano Collection and Evolution series, and a fine Gilbert Erector® No. 6½ set of the 1950s. John Wapshott also had some Erector®, vehicles in the Constructor 5-in-1 olive green and yellow colours; endless Jeeps, small vehicles in "other" system, and his immense (8-foot) Meccano Junior bridge on which to display them.

Dennis Caswell's No.10 set cargo ship model in yellow awed small visitors. Beside it were a red/green No.8-set Meccanograph, a No.4 helicopter from the new series, a Ferris wheel.

Hubert Hogle's girlfriend Martha III the robot always attracted crowds especially when she "watched" the car climb around his skyscraping Möbius Strip.**(2)**

Don Pearson had his 1964 Binns Road display model of the aeroplane ride, and the Kearney 1934-37 Monorail. His 1930s vertical marine engine with Stephenson valve gear, in black plates, he said had to have a heavy balance weight of semi-circular plates added to the crankshaft before it would turn over.

Norm LaCroix, with Marj and Mike, had the "nodding donkey", oilwell jack, Meccano Aeroplane Constructor (were they replicas?), and his magnificent brass traction engine.

Scott and Earl Pitts outdid themselves. Scott's "Labyrinth" ball-maze-balancer with radio control and spiral ball-lift will be a future modelplan **(5)**. Earl's version of one of the Konkoly designing machines had been modified with a Gilbert Erector strip with ¼-inch hole spacing, to give finer adjustment of the pen arm. The "interrupting motion machine" (or string fling") is, according to Earl, actually used in a clock mechanism. An unusual oldie was a U.S. Meccano set in nickel plate with a 1916 electric motor. For good measure there were the energetic "Rider in the Sky" cyclist hanging from his overhead track, and a Keith Cameron dumptruck and bulldozer.

The outstanding crowd-puller was as usual Attila Szakonyi's horserace. there were also a Märklin robotic arm, and Erika's Meccano Junior models. Kirk Roth's bagatelle game also held kid's; with them he had the new Ferris Wheel and helicopter, and a walking machine.

Don Redmond's spread of models included a rocking horse in 1928 dark red/green with clockwork motor; a semi-trailer truck using Gilbert Meccano large baseplate for the trailer; a truck and castle gate in Engineer parts made in (1943-6) in Toronto; a centipede; improbable flowers using propeller blades; a horsedrawn chemical fire engine designed in Kingston in 1895; and assorted railway models **(3)**.

Eric Eisen offered a kiddies' corner; the simple balance, using Flat Trunnions as weights, taught physics and intrigued the kids.

Most complex and mind-boggling was Earl Pitts' Grand Orrery. Set in motion Friday morning, it had crept around to complex angles by Sunday evening. Norm LaCroix's 1920 Inventor's Outfit B, in immaculate nickel and brass, was just edged out as oldest exhibit by Earl's 1916 American set.

We never did find out what the model in Picture **(6)** was: a science-fiction tunnelling machine? a secret weapon? a termite exterminator?

Our sincere best wishes, and an enormous birthday card, went to Jack Smith in Petawawa, who was 80 in late October.

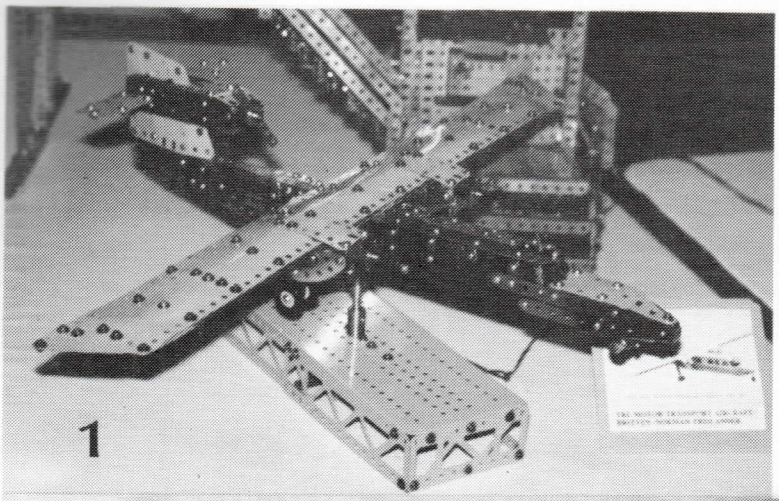

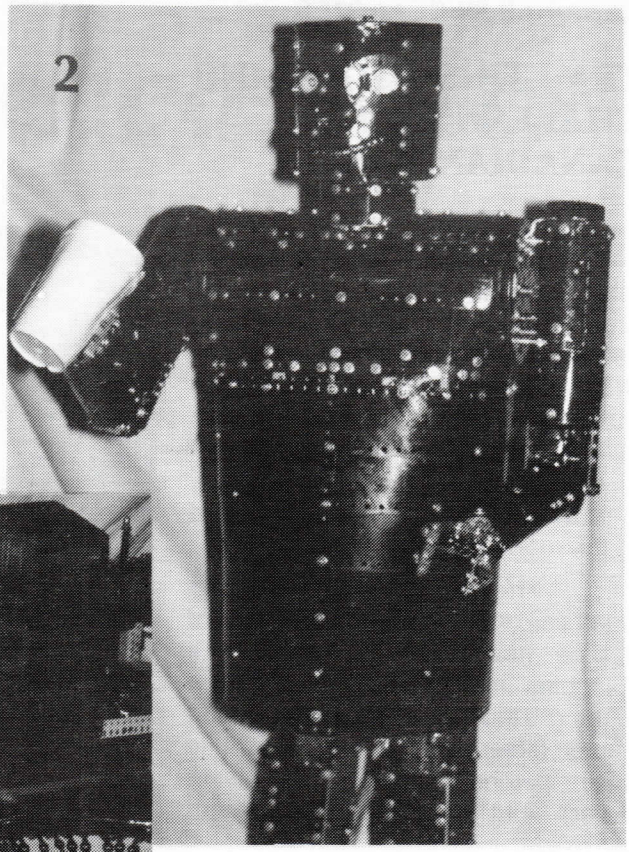

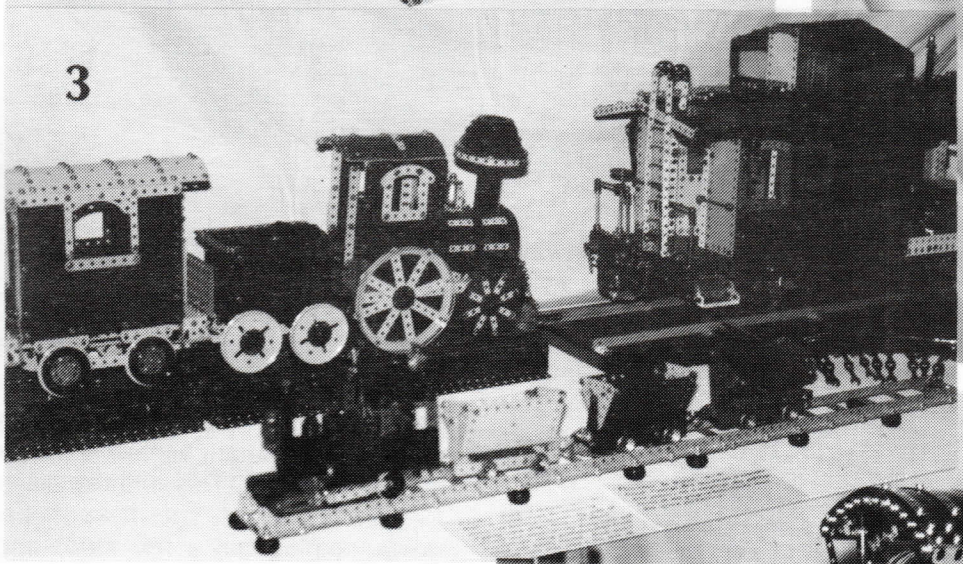

HOBBY SHOW
NOV. 1996

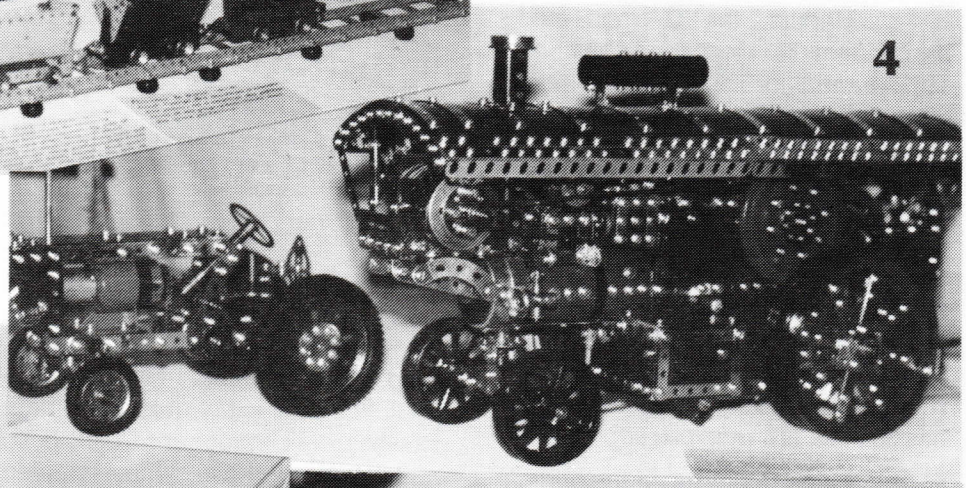

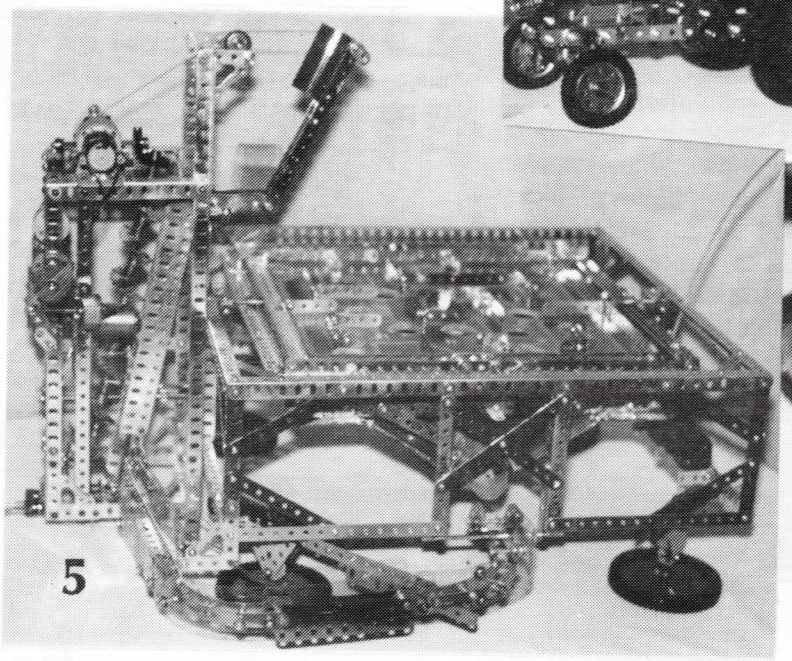

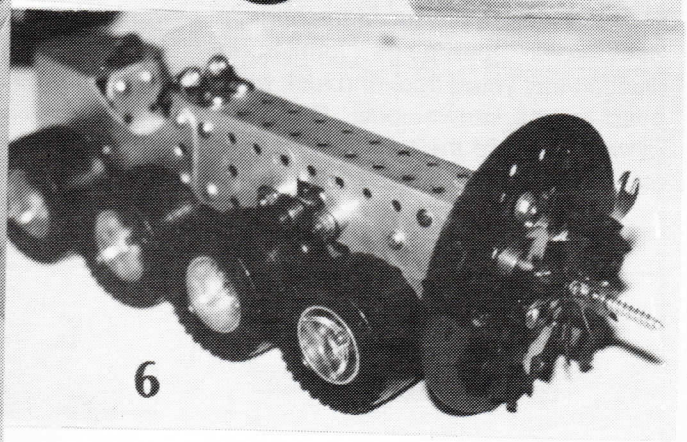

TRY THIS MODELING CHALLENGE! CANADIAN WINTER

Canadian Modelers retreat into Meccano® in winter, like groundhogs into their burrows, to escape the inevitability of climate. Winter sport enthusiasts try to lure us out with assurances that the bracing climate (Skegness has *nothing* on Canada!) is good for us, but we resist. This avoidance seems to be reflected in the models that we produce.

There is the Penguin Staircase, Keith Cameron's version of a fine item (but we don't have Penguins in the Far North); his Holt logging tractor, and the Lombard log hauler (steered by a man in a little cabin perched ahead of a steam boiler)—but these models came out of Florida!

Märklin, the German-made descendant of Meccano®, has in a 1970 manual for its Set 1010 a model of an iceboat. For copyright reasons *CMN* can't show the model, whose hull is made of a flanged plate and a sector plate; its steering tiller turns both the single rear runner and the two forward runners. There have been small and ancient models of a ski-runner, and snowplow blades in the Canadian system, The Engineer (*CMN*, June 1996)—but think what possibilities are unexplored!

Canada produced the original Bombardier auto-neige, familiar in Québec fifty years ago, and look what it led to, the snowmobile. Canada's railways needed the rotary snowplow, as well as wedge plows both single-sided and V-shaped. There are the sleek skiers of today, not to mention snowboarders, toboggans (really *good* models) and those wheel-steered plastic snow sleds; highway plows with enormous wings; snowblowers from sidewalk to airport sizes; and surpassing all else, indispensable to Canadian winter sport (whatever happened to outdoor rinks?) the ice-cleaning machine (yes, there is a Canadian machine, the Olympia)..

CN Rotary Snowplow, Railway Museum, St-Constant (Delson) Qué.

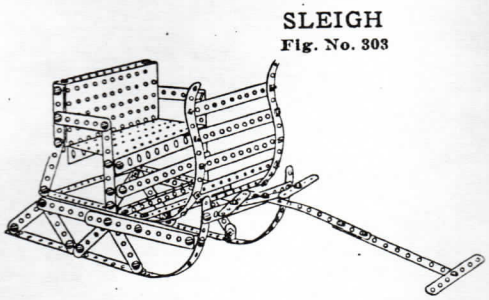

Sleigh

Snowflakes: The most common thing in Canadian winter is never modeled: snow! This month's cover may be a first! A snowflake model needs nothing but a few strips and some bolts. There are only a few simple rules: The snowflake is symmetrical about three lines which radiate at 60° from each other. All branches must be at 60°/30° to one of these lines. No two snowflakes are alike—which means there are zillions of possible patterns. They can even be solid hexagonal patterns.

Modeling possibilities for many winters to come! Get busy, you escapists! Or what about something as simple as a really fancy, ergonomically-designed snow shovel?

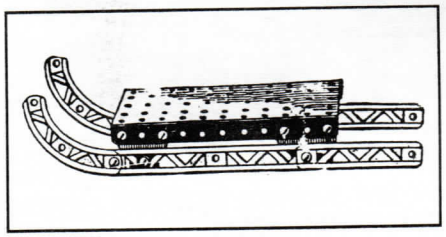

Sled

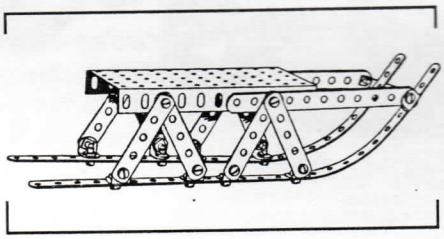

Mountain Coaster

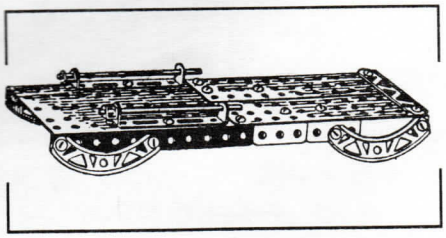

Double Runner Sled